V.N.Erikh, M.G.Rasina, M.G.Rudin

THE CHEMISTRY AND TECHNOLOGY OF PETROLEUM AND GAS

Mir Publishers Moscow

This textbook is intended for students of secondary special schools majoring in the chemical technology of petroleum and gas. The book deals with the chemical and physical properties of petroleum and hydrocarbon gases, the service characteristics of the most important petroleum products, describes processing methods, and gives flow diagrams of the refining of petroleum and hydrocarbon gases, the equipment used for conducting the processes, monitoring and automating them, as well as economic characteristics.

The material has been set out in accordance with the latest achievements of science and engineering and with a view to the present state and prospects for the development of the petroleum refining industry.

As regards the chemistry of petroleum, the authors have treated not only the traditional topics of the origin of petroleum and the ways of studying its composition, but also the fundamental information on the chemistry of the major refining processes. In describing the technology, the authors have given special attention to the most popular progressive processes.

The present textbook has been written by well known specialists in the field of petroleum chemistry and technology.

The late VLADIMIR ERIKH worked for over 40 years in the petroleum refining and petrochemical industry, his last position being deputy director of the Mendeleev Chemical Technology School, Leningrad. He is the author of a number of textbooks and training aids such as *The Chemistry of Petroleum*, *The Technical Analysis of Petroleum Products and Gas*, and *The Technology of Synthetic Liquid Fuel* (all in Russian).

MAIYA RASINA, after working in the petroleum refining industry for many years, devoted her attention to training specialists in the field and at present is an instructor at the Mendeleev Chemical Technology School, Leningrad. Her main interests include the compilation of curricula and methodological aids for the course in the chemistry and technology of petroleum.

MIKHAIL RUDIN. Cand. Sc. (Chemistry) is deputy chief engineer of the Leningrad State Designing Institute of the Petrochemical Industry (Lengipronefteкhim). He has been working in the field for almost 30 years, devoting his main attention to the design and modernization of petroleum refineries. He is the author of numerous textbooks and monographs on the subject, for example, *The Chemistry of Petroleum and Gas*, *The General Facilities of a Petroleum Refinery*, and *The Design of Petroleum Refineries* (all in Russian).

ISBN 5-03-000076-3

V.N.Erikh, M.G.Rasina, M.G.Rudin

THE CHEMISTRY AND TECHNOLOGY OF PETROLEUM AND GAS

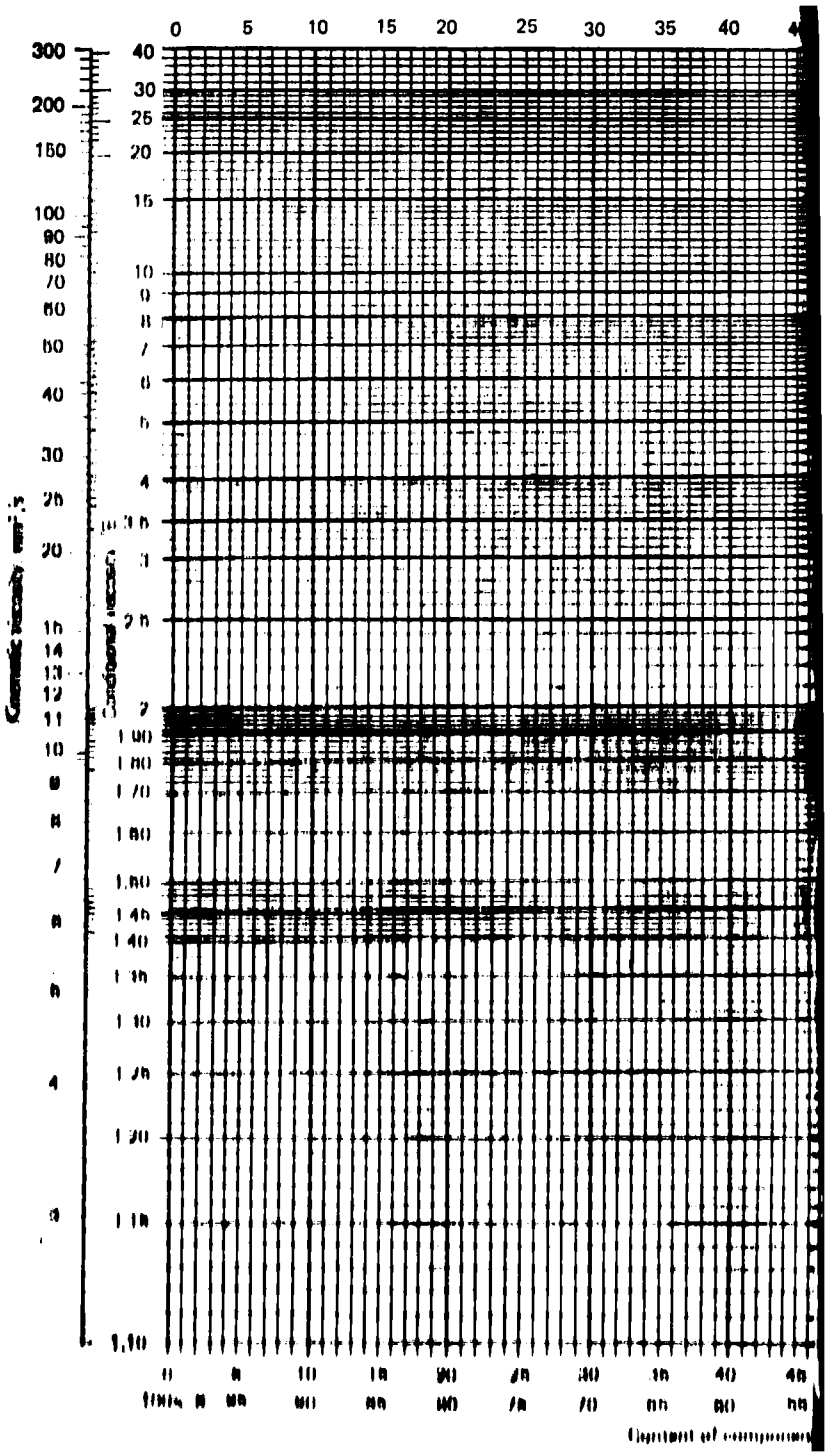
0 5 10 15 20 25 30 35 40
300 200 150 100 90 80 70 60 50 40 30 25 20 15 14 13 12 11 10 9 8 7 6 5 4 3
40 30 25 20 15 10 9 8 7 6 5 4 3.5 3 2.5 2 1.90 1.80 1.70 1.60 1.50 1.45 1.40 1.35 1.30 1.25 1.20 1.15 1.10
Conductivity
Conductivity
Content of components

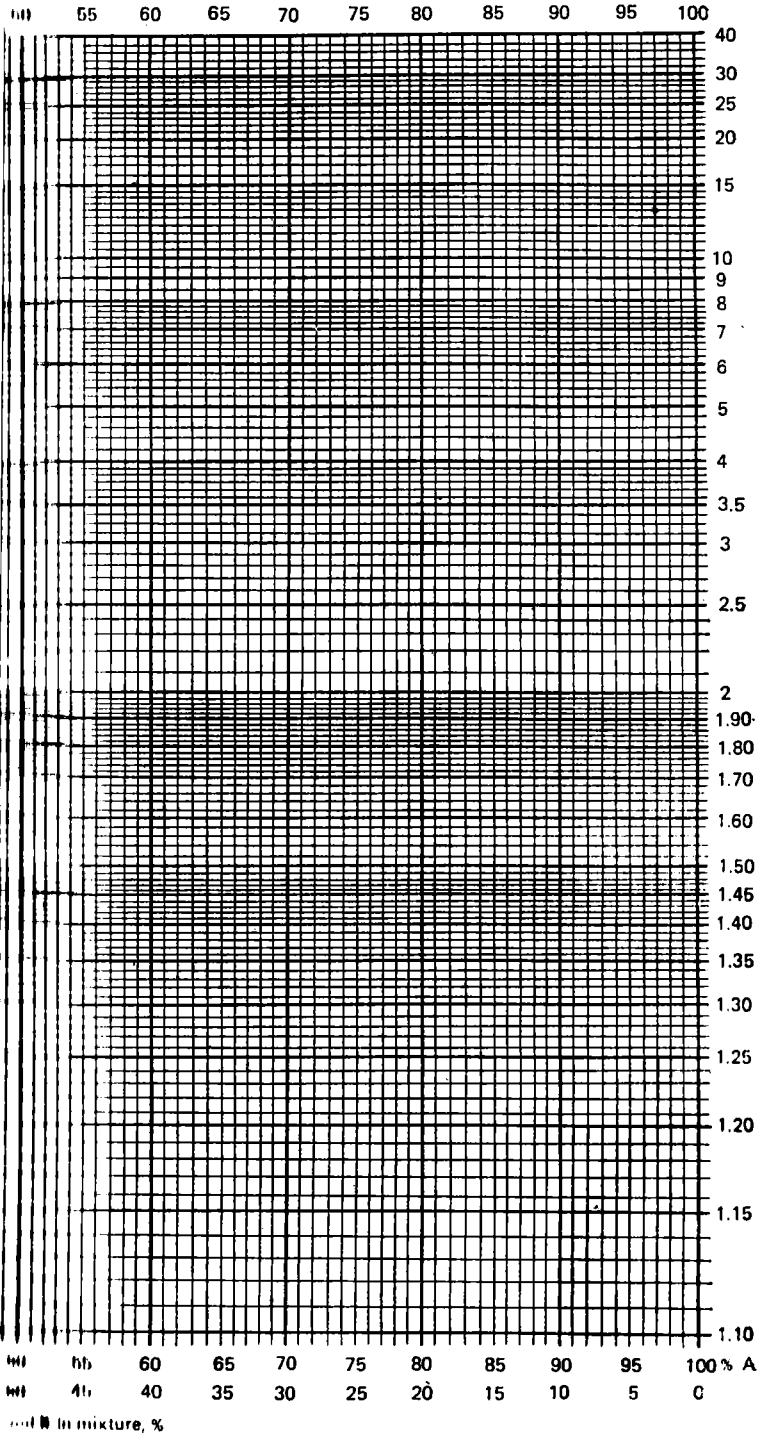
55 60 65 70 75 80 85 90 95 100
40
30
25
20
15
10
9
8
7
6
5
4
3.5
3
2.5
2
1.90
1.80
1.70
1.60
1.50
1.45
1.40
1.35
1.30
1.25
1.20
1.15
1.10
60 65 70 75 80 85 90 95 100 % A
40 35 30 25 20 15 10 5 0
in mixture, %

В.Н. Эрих, М.Г. Расина, М.Г. Рудин

ХИМИЯ И ТЕХНОЛОГИЯ НЕФТИ И ГАЗА

ИЗДАТЕЛЬСТВО «ХИМИЯ»
ЛЕНИНГРАД

V.N.Erikh, M.G.Rasina, M.G.Rudin

THE CHEMISTRY AND TECHNOLOGY OF PETROLEUM AND GAS

Mir Publishers Moscow

Translated from the Russian by G. Leib

First published 1988
Revised from the 1985 Russian edition

TO THE READER

Mir Publishers would be grateful for your comments on the content, translation and design of this book. We would also be pleased to receive any other suggestions you may wish to make.

Our address is:
Mir Publishers
2 Pervy Rizhsky Pereulok
I-110, GSP, Moscow, 129820
USSR

На английском языке

Printed in the Union of Soviet Socialist Republics

ISBN 5-03-000076-3

© Издательство «Химия», 1985
© English translation, Mir Publishers, 1988

PREFACE TO THE ENGLISH EDITION

This textbook is intended for students at secondary professional schools specializing in the chemical technology of petroleum and gas. The book deals with the chemical and physical properties of petroleum and hydrocarbon gases and the applications of the most important petroleum products. It describes processing methods and gives flow diagrams for the refining of petroleum and hydrocarbon gases. The equipment used for conducting the processes, monitoring and automating them, as well as economic aspects are also discussed.

The material is presented in accordance with the latest achievements in science and engineering and takes into account the present state and prospects for the development of the petroleum refining industry.

As regards the chemistry of petroleum, we deemed it necessary to consider not only the traditional questions about the origin of petroleum and the methods of studying its composition, but also to present fundamental information on the chemistry of the major refining processes. In describing the technology, we gave special attention to the advanced processes that are most popular in the USSR and in other countries. The descriptions of production processes are set out in the following order: feed stock, products, parameters of the technological conditions and a description of the flow diagram, the material (mass) balance, basic equipment, etc.

The first Russian edition of the book, written by us along with the late V.N. Erikh, was published in 1972. Two revised editions were printed in 1977 and 1985. A number of revisions taking into consideration the most recent advances in technology were introduced into the latest edition, and it served as the starting point for the present English edition.

M.G. Rasina *M.G. Rudin*

CONTENTS

Introduction 9

I.1. Petroleum and Natural Combustible Gases 9
I.2. Brief Historical Review 15

Chapter 1. Chemical Composition and Physical Properties of Petroleum 22

1.1. Fractional and Chemical Composition 22
1.2. Alkanes 26
1.3. Cycloalkanes and Arenes 30
1.4. Hydrocarbons with a Hybrid Structure 36
1.5. Compounds Containing Oxygen, Sulphur, and Nitrogen 38
1.6. Resinous and Asphaltenic Substances 45
1.7. Physical Properties 43
1.8. Thermal Properties of Hydrocarbons and Petroleum Fractions 56

Chapter 2. Methods of Analysing the Chemical Composition of Petroleum and Its Products 59

2.1. Separation of Petroleum Components 59
2.2. Analysis of Light Distillates 64
2.3. Analysis of Crude Petroleums and High-Boiling Fractions 71

Chapter 3. Classification of Petroleums and Their Products. Composition and Service Properties of Petroleum Products 77

3.1. Classification 77
3.2. Carburettor Fuels 85
3.3. Jet Fuels 91
3.4. Diesel Fuels 94
3.5. Petroleum Oils. Additives to Oils 96
3.6. Chemmotology. Methods of Assessing Fuel and Oil Quality 104

Chapter 4. Preparation of Petroleum for Processing 105

4.1. Gathering and Preparation of Petroleum at Fields. Petroleum Stabilization 105
4.2. Processing of Natural and Casing-Head Gases 108
4.3. Dehydration and Desalting 109
4.4. Sorting and Mixing 119

Chapter 5. Primary Petroleum Processing 120

5.1. Purpose 120
5.2. Flow Diagrams of Petroleum Primary Distillation Plants 125
5.3. Operating Conditions of Atmospheric and Atmospheric-Vacuum Distillation Plants 131

5.4. Material Balance and Product Quality of Atmospheric and Atmospheric-Vacuum Plants 132
5.5. Basic Equipment of Primary Petroleum Distillation Plants 134
5.6. Prevention of Corrosion 149
5.7. Operation of Distillation Plants 150
5.8. Safety Engineering 157
5.9. Technical and Economical Indices of Plants 159
5.10. Secondary Distillation of Petroleum Fractions 159

Chapter 6. **Thermal Processes** 162

6.1. Brief Outline of Secondary Petroleum Treatment Processes. Thermal Processes 162
6.2. Thermodynamics and Kinetics of Thermal Hydrocarbon Reactions 164
6.3. Thermal Transformations of Hydrocarbons 170
6.4. Effect of Various Factors on the Thermal Cracking Process 176
6.5. Feed Stocks, Products, and Parameters of Thermal Cracking 179
6.6. Basic Equipment and Operation of Thermal Cracking Plants 184
6.7. Types of Petroleum Residue Coking Plants. Feed Stock and Products 186
6.8. Flow Diagrams and Operating Conditions of Coking Plants 191
6.9. Pyrolysis Feed Stock, Parameters, and Products 199
6.10. Pyrolysis Plant 202

Chapter 7. **Thermocatalytic Processes of Petroleum Fraction Treatment** 208

7.1. Catalysis and Properties of Catalysts 208
7.2. The Catalysts and Mechanism of Catalytic Cracking 212
7.3. Stock, Parameters, and Products of Catalytic Cracking 218
7.4. Catalytic Cracking Plant with Bead Catalyst 223
7.5. Catalytic Cracking Plant with Powdered Catalyst 228
7.6. Catalytic Reforming Mechanism and Catalysts 234
7.7. Stock, Parameters, and Products of Catalytic Reforming 236
7.8. Catalytic Reforming Plants with a Fixed- and Moving-Bed Catalyst 241
7.9. Equipment of Catalytic Reforming Plants 245
7.10. Separation of Arenes from Catalytic Reforming Products 248
7.11. Catalysts and Mechanism of Hydrogenation Processes 253
7.12. Hydrofining of Distillates 258
7.13. Hydrocracking of Distillates 263
7.14. Hydrofining and Hydrocracking of Residues 270

Chapter 8. **Petroleum Gas Processing** 272

8.1. Characteristic of Gases. Treatment and Drying 272
8.2. Separation of Gases 277
8.3. Alkylation of Branched-Chain Alkanes with Alkenes 282
8.4. Polymerization (Oligomerization) of Alkenes 292
8.5. Isomerization of Light Alkanes 295

Chapter 9. **Dewaxing and Treatment of Light Petroleum Products** 299

9.1. Carbamide Dewaxing of Diesel Fuels 299
9.2. Extraction of Liquid Alkanes by Adsorption on Molecular Sieves 303
9.3. Treatment of Light Distillates 307

Chapter 10. **Production of Oils** 310

10.1. Fundamentals of Technology 310
10.2. Use of Selective Solvents in Oil Treatment Processes 313
10.3. Deasphalting 316
10.4. Phenol and Furfural Treatment 321
10.5 Treatment with Double Solvents 329
10.6. Dewaxing 335
10.7. Adsorption Treatment 342
10.8. Sulphuric-Acid and Alkali Treatment 349
10.9. Hydrofining and Hydrocracking 352
10.10. Collecting and Regenerating Waste Oils 357

Chapter 11. **Production of Petroleum Products for Various Purposes** 358

11.1. Solid Paraffin Waxes and Cerosines 358
11.2. Greases 360
11.3. Petroleum Asphalts 366
11.4. Additives 372
11.5. Petroleum Acids and Sulphoacids 376

Chapter 12. **General Facilities at a Refinery** 379

12.1. Reception and Transportation of Petroleum and Its Products 379
12.2. Storage of Petroleum and Its Products. Preparation of Commercial Products 381
12.3. Power Supply 385
12.4. Water Supply and Sewerage 392
12.5. Air and Inert Gas Supply. Flare System. Storage Facilities 395

Chapter 13. **A Modern Refinery** 402

13.1. Basic Flow Diagrams 402
13.2. Consolidated and Combined Plants 408
13.3. General Layout of a Refinery 409
13.4. Protection of Environment from Contamination by Refinery's Effluents 411

Recommended Literature 415
Index 416

INTRODUCTION

I.1. Petroleum and Natural Combustible Gases

Petroleum (crude oil) is a liquid combustible mineral occurring in the Earth's sedimentary mantle. It consists of a complicated mixture of hydrocarbons (alkanes, cycloalkanes, arenes) and compounds containing heteroatoms such as oxygen, sulphur, and nitrogen in addition to carbon and hydrogen.

Petroleum is an oily liquid fluorescing in the light. Its colour depends on the content and structure of the resinous substances in it. Dark (brown, almost black), light, and even colourless petroleums are known. Petroleum is lighter than water and almost insoluble in it. The viscosity of petroleum is determined by its composition, but it is always much higher than that of water.

Petroleum is a combustible material. Its heat of combustion is higher than that of solid combustible minerals (coal, shale, peat) and is about 42 MJ/kg. Unlike solid combustible minerals, petroleum contains little ash.

The origin of petroleum is one of the most involved problems of modern science. A substantial majority of geologists and chemists support the theory of the organic origin of petroleum, but individual scientists consider that petroleum forms in nature abiogenically, at the expense of various chemical transformations of inorganic substances.

D. Mendeleev was one of the first to advance the theory of the inorganic origin of petroleum (1877). According to his hypothesis, the petroleum hydrocarbons formed as a result of the reaction of water with metal carbides in the Earth's bowels. Although such reactions do occur in principle, the carbide theory cannot explain the appearance in petroleum of an enormous number of hydrocarbons of the most diverse structure; it is also not clear how water could find its way from the region of low pressures on the Earth's surface to the region of high pressures in its bowels. Recent years have seen the advancing of other hypotheses postulating the cosmic, magnetic, or volcanic origin of petroleum, but they did not gain many followers.

The major part of the geological and geochemical observations and facts accumulated in the world's science on petroleum to date, including the scales of various processes of hydrocarbon formation, speak up better in favour of the hypothesis of the organic origin of petroleum. The genetic relation between the components of petro-

leum, living matter, and the organic matter of ancient sedimentary rock and modern sediments, which can be proved very well, is especially convincing. As regards the amount of hydrocarbons of an organic origin, it is exceedingly large and completely ensures the formation of petroleum and gas pools.

The organic theory of petroleum's origin consists fundamentally in that petroleum and gas form from organic matter scattered in sedimentary rock. The remains of microscopic-sized marine animals and plants (plankton, benthos) to which remains of the animal and plant world were added are considered to be the main organic material accumulating in sedimentary rock.

In the top layers of the sediments, the buried organic matter is subjected to the action of oxygen and bacteria and decomposes to a considerable extent to form gases (CO_2, N_2, NH_3, CH_4, etc.) and liquid products soluble in water. The most stable part of the initial organic matter as regards chemical and bacterial action remains in the precipitate.

Subsequently, as it submerges into the body of the sedimentary rock, this organic matter during many millions of years at a depth of 1.5-3.0 km and more, already in a reducing medium, experiences the action of elevated temperatures (approximately up to 120-150, and less often to 200 °C) and of a pressure of 10-30 MPa, as well as the catalytic influence of the enclosing rock (mainly clays). According to modern views, it is exactly in this stage as a result of the thermal and thermocatalytic processes that the organic matter, chiefly lipids (fats, wax, oils), transforms into the hydrocarbons of petroleum.

Petroleum formation is a very involved, multiple-stage and prolonged chemical process, the details of whose mechanism are meanwhile not clear. Since the initial organic matter is dispersed, its conversion products—petroleum and gas—are also initially dispersed in the source bed, most often clay rock. But owing to their mobility, petroleum and gas, like water, are capable of travelling in the rock mass. Geologists call this motion **migration.** Primary and secondary migration are distinguished. As a result of primary migration from the source bed, the petroleum and gas gather in adjoining porous sandy and carbonate rock. The migration can be caused by various factors such as forcing out or breaking through because of the pressure of the rock, diffusion, especially of gases, travelling with water, the dissolving of the liquid substances of petroleum in gases at high pressures and migration in the form of a vapour and gas mixture, and filtration along the pores and fissures of the enclosing rock if there is a pressure difference.

Subsequently, as a result of motion along porous strata and of vertical migration caused by gravitational and tectonic factors, the petroleum and gas accumulate in traps, i.e. in such sections of porous rock from which further migration is impossible or very difficult.

The petroleum accumulations in these traps are called **petroleum pools.** If the amount of petroleum (or gas) in a pool is large enough or there are several pools in a given structure of the rock strata, we have to do with a petroleum, petroleum-gas, or gas deposit or field.

Thus, the conditions of occurrence of petroleum in rock are such that the petroleum and gas fill the pores of the enclosing rock. The higher the porosity ratio of the rock, the more petroleum does it contain. Since clays, especially moist ones, have virtually no pores, clay mantles of porous rock are a good protection against the further migration of a deposit. Water is almost always present in fields together with the petroleum and gas because it also fills the pores of the rock.

The major part of petroleum traps and pools is generally at an appreciable depth (900-2300 m). Outcroppings of petroleum to the Earth's surface are quite rare. In the past, the procuring of petroleum from wells at such fields close to the Earth's surface was practised, for example, in Azerbaijan.

The task of petroleum geologists is the prospecting for and surveying of petroleum and gas fields. At present, petroleum exploration is carried out by a combination of geological, geophysical, and geochemical methods.

The geological method consists in studying the structure of sedimentary rock with the aid of boreholes and wells that may reach a considerable depth. The results of drilling are used to compile structure maps showing the composition and age of the rock and the features of stratum relief. Next exploration wells are drilled to discover petroleum or gas traps. When these have been found, more exploration wells are drilled to establish the size of the petroleum-bearing area and the reserves of petroleum or gas.

The development of geophysical methods of studying rock began comparatively recently. They are based on measuring with very accurate instruments such phenomena and physical parameters as gravimetric anomalies, magnetic anomalies, the electrical conduction of rock, the features of propagation of the seismic oscillations arising when explosions are conducted in shallow wells. Acoustic and radiometric methods are also employed with the use of neutron bombardment of wells.

The combined employment of geophysical and geological methods has substantially expanded the possibilities of studying the structure of rock, detecting traps, and establishing the depth and exact location of petroleum strata.

The prospecting for and exploration of petroleum fields have made great progress everywhere. The search for off-shore petroleum fields, first of all on the shelf (foreshore) is being conducted at an intensive rate.

The world's explored reserves of petroleum are estimated to be 90 000-95 000 million tonnes, the expectations being 250 000-280 000 million tonnes (a number of specialists consider that the expected reserves exceed 500 000 million tonnes). Petroleum fields are found in various regions of the world, about 85% being produced at very large fields forming only 5% of the total number of fields.

The major petroleum fields in foreign countries are Ghawar (10 100 million tonnes), Safaniya (4100 million tonnes), and Manifa (1500 million tonnes) in Saudi Arabia; Burgan (9900 million tonnes) in Kuwait; Lagunilas (1500 million tonnes) in Venezuela; Rumaila (2700 million tonnes) and Kirkuk (2200 million tonnes) in Iraq; Ahwaz (2400 million tonnes), Marun, Agha-Jari, and Gakhsaran in Iran; Chicontepec (1600 million tonnes) in Mexico; Hassi-Messaoud in Algeria; and Pradho-Bay in the USA.

In the Soviet Union, petroleum is produced both in the long known petroleum-bearing regions (Baku, Grozny, Sakhalin, Volga region and Western Urals) and at fields whose development began during the last 25-30 years (the Mangyshlak Peninsula in Kazakhstan, the Komi ASSR). About 70% of the petroleum at present is produced at fields in West Siberia (Tyumen and Tomsk regions).

The leading Soviet petroleum fields include the Samotlor, Surgut, and Ust-Balyk ones in West Siberia, the Arlan, Romashkino, and Tuimazy ones in the Volga-Ural petroleum and gas-bearing region, the Usinsk field in the Komi ASSR, the Neftyanye Kamni and Sangachaly-More in Azerbaijan, and the Uzen, Tengiz, and Karazhanbas fields in Kazakhstan.

The industrial production of petroleum from drilled wells began in the 19th century. It grew at especially high rates in 1950-1975, but then the rate of growth dropped substantially. The dynamics of the petroleum output in the main producer countries is presented below (in million tonnes):

	1940	1960	1970	1983
USSR	31.1	147.9	353.0	616.3
USA	184.6	351.3	479.6	480.1
Saudi Arabia	0.7	62.1	176.7	249.2
Mexico	6.0	13.5	21.4	147.3
Iran	9.0	53.2	165.8	122.9
United Kingdom	0	0.1	0.1	114.9
Chinese People's Republic	0	5.0	24.9	105.8
Venezuela	25.2	141.7	184.7	95.3
Canada	1.2	26.2	62.9	76.8

The Soviet Union occupies the first place in the world in petroleum production and completely meets its demands for this product.

Wells are drilled to extract petroleum from the Earth's depths in the same way as for prospecting and exploration. They are generally drilled in a vertical direction, but modern engineering also makes it possible to drill inclined wells at any angle.

A variety of bits are employed to break up the rock, most often of the rolling-cutter drilling type. They consist of toothed cones that crush and grind the rock when they roll over it. Lately diamond bits have come into use. The bit must constantly rotate in operation. This is achieved either by rotation of the entire drilling system of pipes (rotary drilling), or by employing a hydraulic turbine or electric downhole motor. In this case, a multistage turbine or an electric motor is lowered to the well bottom together with the bit and rotates the latter. This is the most progressive method, and it is the one mainly used in drilling gas and petroleum wells. The crushed rock is removed from the well by feeding a clay solution into the well through the drilling pipes. This solution plays a major role. It helps to remove the rock from the well, cools the drilling tools, and cements the surface of the well shaft, which prevents its destruction and the breaking through of water, petroleum, or gas. Moreover, in turbodrilling, the clay solution is the driving force operating the turbine and bit. The depth of petroleum and gas wells with modern drilling equipment can reach six or seven kilometres. The future will see wells driven to a depth of 10-15 km.

As a well is drilled, drilling pipes have to be added to the string. A separate pipe has a length of 6-10 m. Both ends of a pipe are threaded for connection to other pipes. In addition to the drilling pipes, large-diameter (up to 426 mm) steel casing pipes are introduced into the well to strengthen the shaft. All the labour-consuming operations on a drilling rig are now mechanized.

When a well reaches a productive stratum, the flow string is lowered into it. This string is provided on top with a system of pipes, gate valves, and connections to prevent spouting. Such a "Christmas tree" resists a pressure up to 25 MPa and more. Next the clay solution in the well is replaced with water, and the well is "uncorked", as it were, because the pressure in it drops. To cause the petroleum to flow toward the well, the casing pipes at the stratum are pierced by bullet gun or projectile gun perforators. The petroleum and gas in a pool are under the pressure of the stratal water, gas, and elasticity of the compressed rock. Since this pressure diminishes as petroleum is produced, it is maintained by injecting water beyond the limits of the petroleum field contour (edge water encroachment), or by using compressors to pump in a gas.

If the pressure in the petroleum stratum is high, the petroleum is produced by the **natural flow method** through valving. In this case, the petroleum flows into traps and tanks from the Earth's bowels under its own pressure. If the pressure in the stratum is low, the **gas lift (compressor) method** is employed. Natural gas is pumped into the well through the annular space between the pipes under a pressure up to 5 MPa. At the well bottom, it mixes with the petroleum and makes it lighter, thus helping it get into the flow string.

A third method of producing petroleum is the **sucker-rod pump method,** a variety of the bottom-hole-pump methods. It is employed in the operation of deep wells and with a large pressure drop in the stratum. Piston pumps are lowered into the well. They are connected by a string of sucker rods to the pumping unit. The beam pumping unit is actuated by an electric motor and is responsible for the reciprocating motion of the pump plunger. The pump operates continuously, and the petroleum is gradually pumped out to the surface. Recently centrifugal pumps with an electric motor similar to the drills employing an electric downhole motor have come into use.

At the modern level of engineering and technology, an average of not over half of the petroleum contained in a stratum is extracted from it. Methods of increasing the production of petroleum such as the pumping of surfactants into a stratum and thermal action on a stratum have been introduced on an industrial scale.

Petroleum is exceedingly important for power engineering, transportation, and various branches of industry. Petroleum goes to produce the most diverse kinds of liquid fuel (gasoline, kerosene, diesel, gas-turbine, and furnace fuels), lubricating and special oils, plastic greases, paraffin wax, technical carbon (carbon black), asphalts, petroleum cokes, and other commercial products.

The light alkanes and alkenes, fluid paraffins and solid paraffin waxes, as well as the individual aromatics obtained in the processing of petroleum are valuable raw materials for further chemical processing, i.e. petrochemical synthesis. The latter yields a large diversity of plastics, synthetic resins and rubbers, synthetic detergents, individual organic acids, alcohols, aldehydes, and ketones.

The use of petroleum raw materials frees a large amount of food products (grain, potatoes, fats), previously used for technical purposes.

Natural combustible gases consist mainly of methane, ethane, propane, and butane. They sometimes contain admixtures of liquid hydrocarbons.

The fields of natural combustible gases are divided into gas fields in which the gas pools are not associated with other minerals, gas and oil fields where the gaseous hydrocarbons are dissolved in the petroleum or are above the petroleum stratum in the form of a gas cap, and gas-condensate fields in which the gas is enriched with liquid hydrocarbons.

The explored world reserves of natural gas are estimated to be 60-65 trillion (10^{12}) m^3, and the predicted reserves are 200 trillion m^3. The largest gas fields in foreign countries are Pars (above 2 trillion m^3) and Kangan (above 2 trillion m^3) in Iran, Panhandle-Hugoton (1.96 trillion m^3) in the USA, Slokhteren (1.65 trillion m^3) in the Netherlands, Hassi-Rmel (1.0 trillion m^3) in Algeria. The major gas fields in the USSR include Urengoi, Yamburg, Medvezhye, and Kha-

rasaveisk in West Siberia, Shatlyk and Gazli in Central Asia, and Shebelinka in the Ukraine. The recently discovered unique Orenburg, Astrakhan, and Karachaganak gas-condensate fields are being developed.

The dynamics of natural gas production in the main gas-producing countries is given below (in thousand million m^3):

	1938	1960	1968	1983
USSR	0	45.3	169.1	536.0
USA	66.8	359.7	547.6	472.6
Netherlands	0	0.4	14.0	74.4
Canada	0.9	14.5	52.2	67.0

Natural combustible gases are extracted from the Earth through a network of wells. They are generally produced by the natural flow method. For the gas to begin to flow to the surface, it is sufficient to open a well drilled in the gas-bearing stratum. When the gas flows out freely, the stratum energy is not spent rationally, and destruction of the well is possible. This is why the rate of flow of the gas is restricted by installing a local pipe contraction at the well head. The development of a gas field continues 15-20 years, and during this time about 80-90% of the reserves are extracted.

Natural combustible gases are widely used as a fuel at power plants, in the metallurgical, cement, and glass industries, in the production of building materials, and for municipal and domestic needs. Natural gas is the basis for producing ammonia, methanol, acetaldehyde, acetic acid, acetylene, ethylene, and propylene.

I.2. Brief Historical Review

Appearance of the Petroleum-Refining Industry. Petroleum and natural combustible gas were known to mankind several thousand years ago. The works of Herodotus (5th century B.C.), Plutarch, Pliny the Elder (1st century B.C.), and other scientists describe sources of petroleum in India, Persia, Syria, and on islands in the Mediterranean Sea. Plutarch, when describing the campaigns of Alexander the Great (4th century B.C.), reported on petroleum sources discovered on the Amu-Darya River and on the shore of the Caspian Sea. The ancient Greek scientist Hippocrates (5th-4th centuries B.C.) was the author of prescriptions of many medicines containing petroleum.

Ancient documents show that petroleum began to be used as a fuel and for illumination from times galore. First liquid petroleum independently flowing out to the surface and also asphalts and bitumens that were the products of oxidation and decomposition of the flowed out petroleum were used.

Petroleum is also known to have had military applications in ancient times. Particularly, Greek fire, a combustible mixture of petroleum, sulphur, and saltpetre, was used by the Byzantine Greeks

to set fire to enemy ships. In the 13th century, the forces of Chinghis Khan captured the fort of Bukhara by throwing pots with petroleum into it and shooting burning arrows, which became the sources of large fires. Russian soldiers in battles with the forces of the Polovets khan Konchak, as witnessed by a historian, used arrows with bundles of rags wetted in "earth tar"—petroleum.

In the middle ages, the production of petroleum from pits specially dug for this purpose was begun. The Apsheron peninsula became a major centre of petroleum production. The Arabian scientist and traveller Abdul-Hasan Masudi in the 10th century and the famous Italian traveller Marco Polo in the 13th century visited the region of Baku and described the local petroleum sources. A. Masudi indicated in his notes that several kinds of petroleum were produced in Baku—white, yellow, black, and blue. The petroleum was loaded into leather bags and carried on camels to Persia, India, Syria, and other countries.

The petroleum pits were 10-20 m deep. The top part of deep pits was made wider. Deeper pits were also used. Thus, in the vicinity of the settlement Balakhany, a pit about 60 m deep was discovered. The scale of the production of petroleum from such pits in Baku can be appraised from the data of the German natural scientist E. Kempfer, who calculated the production of petroleum in Baku in 1683 to be about 13 000 tonnes.

Fields of combustible gases have been known to mankind many hundreds of years. Torches of combustible gases on the Apsheron Peninsula and in Daghestan served as beacons for vessels navigating the Caspian Sea. The liberation of combustible gases in North America, on islands of the Malay Archipelago, in India, and elsewhere has been described.

The demand for petroleum as a means for heating and lighting increased. It became impossible to meet the growing demand by production from pits because it was complicated to dig a pit more than 50 m deep, and the difficulties associated with the escaping of gases increased with the depth of these pits.

The petroleum pits gave way to driven wells. In Russia, the first wells were drilled in the vicinity of Baku, in the Kuban region, and near Ukhta. With time, deeper and deeper wells were drilled. It was found that much more petroleum can be produced from deep petroleum-bearing strata than from ones near the Earth's surface.

Initially, primitive rigs with a manual drive were used for drilling wells. A sharp metal bit was pounded against the well bottom to break up the rock. After the debris was removed from the well, a rod with a bit was tied to the rig rope and drilling was continued. This method of producing petroleum was named percussion drilling.

With time, the manual winches for lifting and lowering the drilling tool were replaced by horse-drawn winches and ones with a steam drive,

and casing pipes began to be installed to prevent caving in of the well walls.

In drilling, many wells first produced powerful spouts of petroleum. When the spouting stopped, the petroleum was scooped out of a well with bailers. A bailer was a long pail whose bottom opened inward when it was lowered into the well. The bailer filled with petroleum was lifted from the well, its bottom closing under the weight of the petroleum. The petroleum from the bailer was poured out into a reservoir.

In prerevolutionary Russia, the driving of wells both in Baku and in other petroleum-producing regions of the country was performed only by the percussion method, although back in the 19th century the Russian inventors Shukhov and Ivanitsky proposed more sophisticated methods of producing petroleum—the compressor and the bottom-hole-pump ones.

In the middle ages, natural petroleum was used for lighting and heating without any additional preparation. Under these conditions, light petroleums with a low specific gravity were considered to be the best because they ignited readily and produced less soot. In connection with the short supply of light petroleums, with time the primitive preparation of heavy petroleums for combustion was undertaken to produce illuminating oil or, as it was called, photogene. The distillation of petroleum and the production of photogene were conducted in the middle ages in West Ukraine and Transcaucasia. In the 16th century during the reign of Boris Godunov and Peter the Great, petroleum was distilled at Ukhta. The photogene was delivered in barrels to Moscow and Petersburg.

The 17th and 18th centuries can be considered as the first stage in petroleum refining, but the methods used were very primitive, and the scale was negligible.

In 1821-1823 in the North Caucasus in the vicinity of the town of Mozdok, the Dubinin brothers erected the first industrial plant for the distillation of petroleum. In Great Britain, the distillation of petroleum was begun in 1848, while in the USA the first distillation plant was erected by W. Barnsdall and W. Abbott at Titusville, Pa., in 1860.

A batch still was the main unit at these plants, while illuminating kerosene was the only target product. The light gasoline fraction, and also the main part of the heavy residue were burned because no use was found for them. The residual oil (now called mazut or fuel oil) was used as a wheel lubricant.

In the middle of the 1880's, the batch stills gave way to continuous still batteries, which were created by the Russian engineers A. Inchik, V. Shukhov, and I. Elin.

In 1876, a burner nozzle was invented for burning liquid fuel, which made it possible to use the residual oil as a fuel for the furnaces

of steam boilers. In the same year, the outstanding Russian scientist D. Mendeleev substantiated the possibility of producing lubricating oils from the residual oil. The petroleum oils began to supplant lubricants of a plant and animal origin, and in Russia, the USA, and some other countries, plants were built for the production of lubricating and other oils from petroleum.

In 1890, the Russian engineers V. Shukhov and S. Gavrilov were granted a patent for a continuous pipestill (tubestill) plant that consisted of a direct-fired coil heater, a vaporizer, a rectification column, and heat exchangers. In a short time, continuous still plants came into favour throughout the world. In the USA, the first pipestill was built by M. Trumble in 1911. These plants were the forerunners of the modern plants for the primary processing of petroleum.

Stages in the Development of Petroleum Refining Technology in the 20th Century. At the beginning of the 20th century, the invention and widespread introduction of internal-combustion engines caused a radical revolution in petroleum refining. The light fraction—gasoline, which previously found no application, became the most important product of petroleum refining. The constantly growing demand for gasoline determined the necessity of erecting new petroleum refineries and of developing processes for increasing the yield of the gasoline fractions from petroleum.

In 1900-1925, methods were developed for the compression production of natural gas gasoline from the casing-head (accompanying or associated) gases of petroleum production, and the fundamental laws of gasoline production by the thermal cracking of the heavy fractions were studied. In 1913, the first pressure plant for the thermal cracking of middle distillates of petroleum (gas oils) was placed into service at Whiting, Ind. (USA). During subsequent years, studying of the thermal cracking process was continued in the direction of expanding the stock resources and improving the production flow diagrams.

The following decades (1920-1930's) were characterized by the intensive theoretical and practical development of new petroleum refining processes. The growth in the compression ratio in motor vehicle engines raised the requirements to the antiknock properties (octane number) of gasolines. The processes of catalytic cracking, alkylation, and polymerization of C_3-C_4 alkenes were developed to produce high-octane gasolines.

The 1940's saw the creation of the process of gasoline fraction catalytic reforming used to convert the low-octane straight-run gasoline fractions into components with high antiknock properties (an octane number of 80-85 by the motor method). Alumino-molybdenum and alumino-platinum catalysts are used in the process. In recent years, polymetallic catalysts have also appeared. Catalytic

reforming plants have been erected at virtually all modern petroleum refineries.

Hydrogen, which is a by-product of catalytic reforming, is employed for the effective treatment of diesel, furnace, and jet fuels from sulphurous compounds in hydrofining plants, the erection of which began everywhere in the 1950-1960's.

The catalytic processes of petroleum refining are constantly being improved. The introduction at the end of the 1970's and the beginning of the 1980's of polymetallic catalysts containing additions of rhenium, iridium, and other noble metals made it possible to raise the octane number of the catalysate by two to four units and increase the yield of high-octane gasoline from 82 to 88-90%. The use of zeolite-containing catalysts at catalytic cracking plants increases the gasoline yield 1.5 times and diminishes coke formation.

The technology of producing oils also experienced major changes. If in the first half of the 20th century the main amount of lubricating oils were produced from special grades of petroleums by methods of acid, alkaline, and adsorption treatment, then later the industry saw the introduction of extraction (deasphalting, dewaxing, selective treatment) and catalytic (hydrofining) processes making it possible to produce high-grade base oils from ordinary petroleums.

To ensure a high quality of the oils and increase their efficiency in service, a variety of additives are introduced into them for improving their anticorrosive, antioxidizing, detergent, and other properties.

Beginning from the forties of the 20th century, petroleum, casinghead and natural gases are being used as the raw materials for all kinds of organic syntheses. The production of plastics, synthetic rubbers and fibres, detergents and surfactants, drugs and vitamins, and chemicals for domestic use has been organized on the basis of petroleum raw material. The overall amount of organic synthesis products produced in the world every year has exceeded 100 million tonnes, while the fraction of organic synthesis products manufactured on the basis of petroleum and gas has reached 95%.

The production of petroleum products and petrochemical raw materials from petroleum has been organized in most industrially developed countries. Below is given information on the dynamics of petroleum processing in the leading capitalist countries of the world (in million tonnes):

	1960	1970	1984
USA	399	536	770
Japan	27	167	241
France	33	100	119
Italy	31	116	155
United Kingdom	44	101	101
Federal German Republic	28	106	109
Canada	38	58	93
Netherlands	19	61	75

A most important task of the present period of petroleum refinery development is meeting the demand for petroleum products under conditions when the production of petroleum owing to the limited resources of the feed stock is not only failing to increase, but is even dropping. It is necessary to ensure the proper use of petroleum and reduce the use of petroleum products as furnace fuel. A real possibility of solving this problem has been provided by the achievements of science and engineering in the field of the thermocatalytic processing of fuel oil and its fractions.

Development of Petroleum Refining in the USSR. After the Great October Socialist Revolution, radical changes occurred in the development of the petroleum refining industry. In 1918, the industry was nationalized, while in 1920-1926 the petroleum fields and refineries destroyed during the period of the civil war and foreign intervention were completely restored.

The 1930's saw the beginning of technical reequipment of the industry. The still batteries were replaced by the first primary distillation pipestills, the process of thermal cracking was introduced, and the production of paraffin wax, which was absent in prerevolutionary Russia, was inaugurated.

During this period, new refineries were placed into operation in Bashkiria and the Volga region. This was associated both with the mastering of new petroleum and gas fields of the Ural and Volga regions and with the introduction of a new principle of locating petroleum refineries. According to this principle, the refineries should be located at places of the large-scale consumption of petroleum products because it is more efficient to transport the feed stock—petroleum—along pipelines or by railway than to distribute the products to remote consumers. By 1940, the volume of petroleum refining in the USSR increased in comparison with 1913 more than three times.

In the post-war period, the development of the petroleum refining industry in the USSR was characterized by a constant growth in the volumes of production and improvement of the technical level. By 1949, the enterprises destroyed during the war were restored, and the prewar volume of petroleum processing was reached.

A major achievement of Soviet science and engineering in the 1950-1960's was the creation of a combined technology of processing the sour (sulphur-bearing), highly gummy, and paraffinic petroleums of the Volga-Ural region with the production of high-quality motor fuels, oils, and raw materials for petrochemical syntheses.

At the end of the 1960's and the beginning of the 1970's, a transition to the building of consolidated and combined petroleum refining plants was undertaken. Instead of primary distillation plants with a capacity of one or two million tonnes a year, combined plants for the electrical desalting, primary distillation, and secondary recti-

fication of gasoline with a capacity of six to eight million tonnes a year were erected. Catalytic reforming plants with a capacity of 300 thousand tonnes gave way to plants processing one million tonnes of stock a year.

In the 1970-1980's, combined petroleum processing systems ЛК-6у were built and successfully mastered at several refineries. These systems combine the processes of desalting, atmospheric distillation, catalytic reforming, hydrofining of kerosene and diesel fuel, and gas fractionation.

The petroleum refining industry of the USSR is confronted with the task of substantially deepening the refining of petroleum in the late 1980's and 1990's, and of obtaining 1.5-1.8 times more light-end products from petroleum than it initially contains with the aid of various processes. The intensive building of new plants for catalytic cracking, viscosity breaking, hydrocracking, and coking is being conducted at various refineries of the country.

Chapter 1

CHEMICAL COMPOSITION AND PHYSICAL PROPERTITS OF PETROLEUM

1.1. Fractional and Chemical Composition

Fractional Composition. For all individual substances, the boiling point at a given pressure is a physical constant. Petroleum is a mixture of a large number of organic substances with a different saturated vapour pressure, therefore we cannot speak of the boiling point of petroleum.

Under conditions of the laboratory distillation of petroleum or its products with a gradually rising temperature, the individual components are distilled off in the sequence of the growth of their boiling point or, which is the same, in the sequence of the reduction in their saturated vapour pressure. Consequently, petroleum and its products are characterized not by the boiling point, but by the temperature limits between the initial and end boiling points and the yield of separate groups of components, called **fractions,** distilled in definite temperature intervals within these limits. The fractional composition of a petroleum is assessed according to the results of distillation.

When investigating new petroleum, the fractional composition is determined in standard column stills with fractionating columns. This substantially improves the accuracy of fraction separation and enables one to use the results of fractionation to plot a curve of the true boiling points (TBP) in coordinates of the temperature against the content of the fractions in per cent (here and below, except where otherwise indicated, we have in view the per cent by mass). The fractions boiling up to 200 °C are separated at atmospheric pressure, and the remaining ones, to avoid thermal decomposition, under various vacuum. According to the adopted procedure, the fractions are separated at 10-kelvin (degree) intervals from the initial boiling point (IBP) up to 300 °C, and then at 50-kelvin intervals up to fractions whose boiling ends at 475-550 °C.

The fractionation of petroleum products distilled up to 300 °C is conducted under strictly standard conditions in stills without rectification according to the relevant official standard (in the USSR, according to USSR State Standard GOST 2177-82). This procedure

requires recording of the initial boiling point, the temperatures at which 10, 50, 95, and 97.5% (by volume) are distilled, and also of the residue and losses.

Under conditions of industrial petroleum distillation, the feed stock is separated into fractions not by gradual evaporation as in laboratory stills, but by flash evaporation with subsequent rectification. The following fractions (distillates) are generally separated: gasoline (petrol)—the fraction with an end boiling point of 180 °C, kerosene (paraffin)—the 180-240 °C fraction, and diesel fuel—the 240-350 °C fraction. These distillates are used to produce the light end products such as aviation and motor gasolines, solvent gasolines, aviation and illumination kerosenes, and various grades of diesel fuel. The relevant official standards stipulate a definite fractional composition for all these products.

The residue after distilling off the light-end fractions is called mazut or fuel oil. It is distilled in vacuum into the following fractions: light fuel oils (wax distillate)—350-420 °C, heavy neutral oils (cylinder stock)—420-500 °C, or the vacuum gas oil fraction from 350 to 480 °C is distilled.

The residual stock after the distillation of the fuel oil (above 500 °C), depending on its viscosity, is called tar or half-tar. Tar is the starting material for the production of highly viscous lubricating oils and asphalts.

The petroleums of various deposits differ greatly in their fractional composition and, consequently, in their potential content of gasoline, kerosene, diesel-fuel, and oil distillates. The fractional composition of a petroleum determines the ways of its industrial processing. Light petroleums containing a small amount of oil fractions are encountered very rarely.

We can cite as an example the petroleum of the North Reshtan deposit in the Uzbek SSR. In this petroleum, 83% boils out up to 300 °C. Most petroleums contain on an average 15-30% of fractions boiling up to 200 °C and 40-50% of fractions distilled up to 300-350 °C. Very heavy petroleums have also been found that contain practically no light fractions.

Thus, the petroleum of the Yareg deposit (Komi Autonomous SSR) begins to boil at about 200 °C, while only 20% boils out up to 300 °C.

Detailed data on the fractional composition of Soviet petroleums are contained in the reference book *Petroleums of the USSR* (in Russian).

Chemical Composition. The main elements which all the components of petroleum consist of are carbon and hydrogen. The content of these elements in various petroleums fluctuates within comparatively narrow limits. It averages 83.5-87% for carbon and 11.5-14% for hydrogen. With respect to its high content of hydrogen, petroleum

occupies an exclusive place among the remaining fossil fuels except for hydrocarbon gases.

In addition to carbon and hydrogen, all petroleums contain sulphur, oxygen, and nitrogen. The amount of nitrogen is small (0.001 to 0.3%), and of oxygen varies from 0.1 to 1.0%, but in some high-resin petroleums it can be higher.

Petroleums differ quite substantially in their sulphur content. The petroleums of many deposits contain comparatively little sulphur (0.1-0.5%). But the percentage of sulphurous (sour) petroleums with a sulphur content from 0.5 to 2% has increased considerably lately. There are also high-sulphur petroleums with a sulphur content exceeding 2%. The maximum sulphur content has been observed in the Kokhanov petroleum in the Ukrainian SSR (5.6%), in the petroleums of the Khau-dag and Uch-Kizyl deposits in the Uzbek SSR (3.2-6.3%), and in Mexican petroleum (3.65-5.3%). The petroleum of the Etzel field (the German Federal Republic) containing 9.6% of sulphur is unique. This petroleum consists almost completely of sulphur-containing compounds.

Petroleum also contains other elements in very small amounts, chiefly metals such as vanadium, nickel, iron, magnesium, chromium, titanium, cobalt, potassium, calcium, and sodium. Phosphorus and silicon have also been discovered in it. The content of these elements is expressed in insignificant fractions of a per cent. Germanium in an amount of 0.15-0.19 gramme per tonne has been found in various petroleum products.

Table 1. **Content of Elements, Gums, and Asphaltenes in Selected Petroleums of the USSR**

Field	Composition, %						
	C	H	S	O	N	Gums	Asphaltenes
Arlan	84.12	12.15	3.04	0.06	0.33	16.60	5.80
Romashkino	85.13	13.00	1.61	0.09	0.17	10.24	4.00
Surakhan (oil)	86.70	12.50	0.20	0.26	0.14	9.00	0
Ust-Balyk	85.37	12.69	1.53	0.22	0.19	11.10	2.30
Samotlor	86.23	12.70	0.63	0.25	0.10	10.00	1.36

In accordance with its elemental composition (Table 1), hydrocarbons are the main components of petroleum. The low-molecular part of the petroleum, in which we shall conditionally include substances with a molecular mass not over 250-300 and distilled up to 300-350 °C, contains hydrocarbons with the simplest structure. They belong to the following homologous series:

C_nH_{2n+2}	Alkanes (paraffins)
C_nH_{2n}	Alkenes (olefins), cycloalkanes (naphthenes), monocyclic polymethylene hydrocarbons
C_nH_{2n-2}	Dicyclic alkanes, dicyclic polymethylene hydrocarbons (five-membered, six-membered, and mixed)
C_nH_{2n-4}	Tricyclic alkanes, tricyclic polymethylene hydrocarbons (five-membered, six-membered, and mixed)
C_nH_{2n-6}	Monocyclic arenes (aromatics), hydrocarbons of the benzene series
C_nH_{2n-8}	Dicyclic mixed cycloalkane-arenes (naphthene-aromatics)
C_nH_{2n-12}	Dicyclic arenes

The gasoline fraction contains practically only three classes of hydrocarbons, namely, alkanes, cycloalkanes, and arenes of the benzene series. The kerosene and gas oil fractions already contain a substantial portion of di- and tricyclic hydrocarbons.

Crude petroleum generally contains no unsaturated hydrocarbons with double or triple bonds in the carbon chain. There are only a very few petroleums with an insignificant content of unsaturated hydrocarbons, for example, Pennsylvania petroleum (Bradford, USA).

In addition to hydrocarbons, the low-molecular part of petroleum also includes oxygen-containing compounds such as petroleum acids and phenols, sulphur-containing ones such as mercaptans (thiols), sulphides, disulphides, and thiophanes, and sometimes also nitrogen-containing compounds such as pyridine bases and amines. The amount of all these heteroatomic substances distilled within the 300-350 °C fraction is generally small because the main mass of the oxygen, sulphur, and nitrogen is concentrated in the high-molecular part of petroleum.

Little attention has been given to studying the chemical composition of the high-molecular part of petroleum, to which we conditionally relate substances distilling above 350 °C. Here we have in view fuel oil, oil fractions, and tar. The average molecular mass of the components of this part of petroleum ranges from 300 to 1000. This part of petroleum is a mixture of substances with an exceedingly diverse composition and structure. We can only approximately list the types of compounds included in this mixture:

(1) high-molecular alkanes C_nH_{2n+2};

(2) mono- and polycyclic cycloalkanes with long or short side alkane chains from C_nH_{2n} to C_nH_{2n-10};

(3) mono- and polycyclic arenes with side alkane chains from C_nH_{2n-6} to C_nH_{2n-36};

(4) mixed (hybrid) polycyclic cycloalkane-arenes with side alkane chains from C_nH_{2n-8} to C_nH_{2n-22};

(5) diverse organic compounds of a polycyclic hybrid nature whose molecules consist of purely carbon rings containing heteroatoms—sulphur, and sometimes oxygen or nitrogen, and also long or short alkane chains;

(6) resins and asphaltenes; these most complicated components of petroleum are characterized by a polycyclic structure and the presence of oxygen. The main mass of the nitrogen and metals in petroleum is also concentrated in them. The resin content in some petroleums reaches 30-40%.

1.2. Alkanes

Hydrocarbons of the C_nH_{2n+2} series are present in all petroleums and are among its main constituents. They are distributed unevenly among the fractions, being chiefly concentrated in the petroleum gases and the gasoline and kerosene fractions. Their content sharply drops in the oil distillate. In some petroleums, alkanes are almost completely absent in the high-boiling fractions.

Gaseous Hydrocarbons. The C_1-C_4 hydrocarbons, namely, methane, ethane, propane, butane, isobutane, and also 2,2-dimethylpropane are in the gaseous state under standard conditions. All of them are contained in natural and petroleum casing-head gases. Almost 96% of all the gas reserves in the USSR are not associated with petroleum, i.e. the natural gas deposits are located away from petroleum fields. There are two types of natural gas fields—purely gas and gas-condensate ones.

The main component in most natural gas deposits is methane. In fields such as Urengoi, Zapolyarye, Ust-Vilyuisk, Berezovo, Gazli, Shebelinka, Saratov, and Dashavo-Ugersk, its content reaches 93-98.8%. A feature of the Ust-Vilyuisk gas is its high hydrogen sulphide content (2.5%).

Some natural gases are characterized by a high nitrogen content. For example, the Sultangulov gas in the Kuibyshev district contains 20% of it. In such gases, the nitrogen is often accompanied by noble gases such as helium and argon. The content of methane homologues in natural gas is not high, namely, that of ethane ranges from 0.1 to 8.0% (rarely), of propane from 0.1 to 3%, of butane and higher alkanes generally fractions of a per cent. The admixtures of carbon dioxide do not exceed 2.5%. Because of the great predomination of methane and the small amount of the C_4-C_5 hydrocarbons, most natural gases belong to the **dry** gases.

The gases of gas-condensate fields differ from those of the purely gas fields in that the methane is accompanied by larger amounts of its gaseous homologues beginning with propane, and also by appreciable amounts of liquid alkanes, cycloalkanes and arenes. Thus, one cubic metre of Orenburg gas contains 80 g of liquid hydrocarbons. The gas condensate of the Vuktyl field (Komi ASSR) boils out within the range of 28-300 °C and in addition to alkanes contains about 30% of cycloalkanes and about 12% of arenes.

The formation of gas-condensate deposits is explained by the solubility of petroleum in gases under the high pressure in deep seams.

The density of gases (ethane, propane) at supercritical temperatures under a pressure of about 75 MPa and more exceeds that of the liquid hydrocarbons, and therefore the latter dissolve in the compressed gas. In the exploitation of gas-condensate fields, the pressure drops, and the liquid hydrocarbons separate from the gas in the form of gas condensate.

The gases of petroleum fields are called **casing-head** gases. They are dissolved in the petroleum and separate from it at the surface (the casing head). The composition of the casing-head gases differs sharply from that of dry gases in including a considerable amount of ethane, propane, butanes, and higher hydrocarbons (a total of up to 50%). This is why they have been named **rich** gases. These gases are the source of the lightest **gas gasoline,** which is added to commercial gasolines, and also of compressed liquid gases used as fuel. Ethane, propane, and butanes after their separation are a raw material for the petrochemical industry.

Natural gas is used very widely in the national economy, primarily as a fuel. The consumption of gas is continuously growing in all the regions of the USSR. Gas is used for preparing food, heating residences, at power plants, and in the furnaces of industrial enterprises.

The simplicity of burning gas, the easiness of automation of equipment using gas, and the purity of its combustion products distinguish natural gas from other kinds of fuel and make it a unique heat-carrying agent.

During the last decade, and especially at present, natural gas is also being employed as a motor vehicle fuel.

Natural gas has also found application as a petrochemical raw material in the production of acetylene, methanol, hydrogen, and carbamide. It has a universal nature, i.e. a single chemical enterprise can use it simultaneously as a raw material, technological reagent, technological and heat-supplying fuel, which simplifies the organization of its use. In branches of industry such as glass and cement production, it improves the quality of the products.

Liquid Hydrocarbons. The C_5-C_{15} hydrocarbons are liquids. When petroleum is fractionated, the alkanes from pentane to decane and all their numerous isomers, with a view to their boiling points, should be in the gasoline distillate. It is general knowledge that the boiling points of the branched-chain alkanes are lower than those of their straight-chain isomers. The more compact the structure of a molecule, the lower is the boiling point of the relevant substance. The purely theoretically possible isomers of the alkanes from pentane to decane are 145 in number.

Mendeleev back in 1883 discovered pentane, and then hexane, in Baku petroleum. To date, all the possible isomers of pentane, hexane, heptane, and octane, many nonanes and some decanes have been found in petroleums. More detailed studies have revealed that the

liquid C_5-C_9 alkanes in petroleum mainly have a normal or slightly branched structure. Interesting exceptions to this rule are the Anastasievka petroleum in the Krasnodar region and the petroleum of the Caspian Sea deposit Neftyanye Kamni. These petroleums have been found to contain highly branched-chain alkanes, while in the Anastasievka petroleum hexane, heptane, and octane are practically absent.

The C_{11}-C_{16} alkanes, namely, undecane, dodecane, tridecane, tetradecane, pentadecane, and hexadecane (cetane), get into the kerosene fraction in distillation. They have all been discovered in many petroleums. Two branched undecanes have also been registered in the Neftyanye Kamni petroleum. They are 2,2,3,5-tetramethylheptane and 2,2-dimethyl-4-ethylheptane.

In 1961-1962, branched-chain hydrocarbons with a regular arrangement of the methyl radicals along the carbon chain in positions 2, 6, 10, 14, and 18 were identified in some petroleums. Such a structure of the molecules corresponds to a saturated regular polyisoprene chain. This is why they were called isoprenoids or hydrocarbons with an isoprenoid structure. At present, hydrocarbons with such an alternation of the methyl substituents have been found in the middle fractions of many petroleums, and also in natural asphalts and in organic substances dispersed in the Earth's crust.

The presence of a continuous series of alkanes with such a structure, from 2,6-dimethylheptane to 2,6,10,14,18-pentamethyleicosane (C_{25}), has been established in the 250-400 °C fractions of a number of petroleums such as the Surgut, Romashkino, and Starogroznyĭ ones. Their quantitative content has also been determined. The total content of isoprenoids in these and some other petroleums reaches 3-4%.

It should be noted that the alkanes of petroleum have been studied best of all. Of about the 450 individual hydrocarbons already separated from petroleums or reliably identified in them, about 45 are normal alkanes and about 85 are isoalkanes, while over 20 of the latter are isoprenoids of the composition C_9-C_{25}.

The content of alkanes in petroleums is quite diverse, namely, from 10 to 70% (counting only the light fractions). Among Soviet petroleums, the richest in liquid alkanes are those of the Ozek-Suat (Stavropol region), Mangyshlak, and Groznyĭ fields, some Emba and Fergana petroleums, those of the Maikop, Ishimbai, Tuimazy, Buguruslan, Romashkino, Markovo, and some other fields, chiefly petroleums of the eastern regions. Some petroleums, as an exception, contain very little alkanes or none at all, for example in the Sagir (Emba) and Okhinsk (Sakhalin) fields.

Solid Hydrocarbons. Hexadecane $C_{16}H_{34}$ melts at 18.1 °C. With an increase in the molecular mass of the alkanes C_nH_{2n+2} with a normal structure, their boiling and melting points smoothly grow.

Solid alkanes are present in all petroleums, but more often in small amounts (from tenths of a per cent to five per cent). In typical paraffinic petroleums, their content increases to 7-12%. Examples are the petroleums of the Goragorsky (Groznyi) and Borislav (Western Ukraine) fields. The petroleums of the Ozek-Suat, Zhetybai, and Uzensk fields (the last two are on the Mangyshlak Peninsula) have an exceedingly high content of solid alkanes (15-20%).

The solid alkanes are contained in petroleums in the dissolved or suspended crystalline state. When fuel oil is distilled, the alkanes having the composition C_{18}-C_{35} get into the oil fractions. The alkanes C_{36}-C_{53} with a higher melting point are concentrated in the tars. The number of possible isomers of these alkanes is tremendous. Thus, already hexadecane has 10 359 isomers boiling within 266 to 288.5 °C. But numerous studies have shown that about a half of all the solid alkanes in petroleum have a normal structure, while the remaining ones have only slightly branched structures with a small number of side chains (mainly methyl and ethyl groups). A number of petroleums have been found to contain a continuous series of alkanes beginning from C_{17}. For example, the Bitki (West Siberia) petroleum contains all the alkanes with a normal structure from C_{17} to C_{42}. But at present there is no doubt that in addition to the alkanes C_nH_{2n+2}, petroleums contain solid organic substances with a cyclic structure capable of crystallizing. These hydrocarbons, however, are chiefly contained not in paraffin waxes, but in ceresines. The latter are mixtures of more high-molecular and high-melting hydrocarbons that are separated either from residual petroleum products or from the combustible mineral ozokerite.

Ozokerite (or ozocerite, also called mineral wax) is a mineral formed by a porous rock impregnated with a mixture of solid hydrocarbons with small amounts of high-boiling hydrocarbons and resins. Ozokerite deposits are rare. It is extracted in Borislav at the Dzvinyach field (Western Ukraine), in the Uzbek SSR (the Shor-Sin deposit), in the Fergana Karatau (Sel-Rokho), and on Cheleken Island in the Caspian Sea. The organic part of ozokerite is melted from the rock, and various grades of commercial ceresine are produced by distilling off the lighter fractions and purification.

When producing oils from paraffinic petroleums, the solid hydrocarbons are separated in the form of gatches and petrolatums. The latter are the main raw material for the production of paraffin waxes and ceresines.

Ceresines as regards their composition and properties differ considerably from paraffin waxes. The melting point of commercial paraffin waxes is 45-54 °C, and of the ceresines is 65-88 °C. The waxes readily crystallize in the form of lamellas and lamellar bands; ceresines have a finely acicular structure and crystallize with difficulty. The boiling point of paraffin waxes is up to 550 °C, and of ce-

resines above 600 °C. The molecular masses of the paraffin waxes are below 500, and those of the ceresines range from 500 to 700.

Ceresines are less inert chemically than paraffin waxes. The chemical composition of ceresines is complicated, has been studied insufficiently, and depends on the initial material. Already academician Nametkin and Nifontova revealed that the alkanes C_nH_{2n+2} contained in ceresine mainly have a branched-chain structure. At present, it is considered that these isoalkanes can have cycloalkane or arene radicals in their main carbon chain. It is quite probable that ceresine can contain purely cyclic hydrocarbons with long alkane chains of a normal or branched structure.

Paraffin waxes and ceresines have found numerous applications in many branches of industry such as electrical and radio engineering, the paper, match, chemical, leather, and perfumery industries. Paraffin wax is also employed as a thickener in the production of plastic lubricants. Liquid paraffin waxes are especially important at present as the starting material for the production of protein-vitamin concentrates at microbiological synthesis plants, and also of synthetic fatty acids, alcohols, and surfactants at petrochemical synthesis enterprises.

Thus, the paraffin waxes separated from petroleum are of a major practical significance, and their use has grown very greatly. On the other hand, the presence of solid hydrocarbons in lubricating and special oils cannot be tolerated because they raise the pour point and reduce the fluidity of the oils at low temperatures. This is why oils, as already indicated, are subjected to special purification from paraffin wax, i.e. dewaxing.

1.3. Cycloalkanes and Arenes

Cycloalkanes. In the 1880's, Markovnikov and Ogloblin showed that Baku petroleum contains hydrocarbons with a ring structure of the series C_nH_{2n}. They discovered cyclopentane, cyclohexane, methylcyclopentane, and other homologues without deciphering the structure up to C_{15} inclusively. Markovnikov called these polymethylene hydrocarbons or cycloparaffins (named cycloalkanes at present) naphthenes. Later naphthenes were understood to include not only monocyclic, but also polycyclic polymethylene hydrocarbons of a petroleum origin.

In their total content, the cycloalkanes predominate over the other classes of hydrocarbons in many petroleums. On an average, various petroleums contain from 25 to 75% of polymethylene hydrocarbons of all types. Cycloalkanes are contained in all petroleums and are present in all fractions. Their content generally grows with an increase in the mass of the fractions. Only in the most high-boiling oil

fractions does their amount diminish because of the increase in that of the aromatic structures. The Baku and Emba petroleums are especially rich in cycloalkanes (40-60% of the petroleum, and in some fractions up to 60-80%). The petroleums of the eastern regions, on the contrary, are characterized by a much smaller content of them.

The five- and six-membered rings are the most stable, and they are exactly what predominate in petroleums.

Over 80 individual representatives of this class of hydrocarbons of the composition C_5-C_{12} have been discovered in the gasoline and kerosene fractions of various petroleums. Methylcyclohexane, cyclohexane, methylcyclopentane, and some dimethyl homologues of cyclopentane are present in relatively large amounts in petroleums. Cycloheptane and methylcycloheptane have been discovered in relatively small amounts.

The simplest cycloalkanes, namely, cyclopropane, cyclobutane and their homologues, have not been found in petroleums. The fractions above 200 °C in addition to the cyclohexane homologues contain dicyclic (C_nH_{2n-2}) and polycyclic cycloalkanes with not more than six rings (C_nH_{2n-4} to C_nH_{2n-10}). Their separation from petroleum or at least their identification involves very great difficulties. Of the large number of these hydrocarbons, meanwhile only the structure of 25 individual dicyclic (C_8-C_{12}), five tricyclic (C_{10}-C_{13}), and four tetra- and pentacyclic cycloalkanes has been proved.

The dicyclic cycloalkanes discovered in petroleums, as regards the way in which the rings are combined, relate to the following three types.

1. Non-condensed with a single C—C bond between the rings, for example, dicyclohexyl (b.p. 238.5 °C), which was separated from petroleum by Markovnikov back in the 19th century:

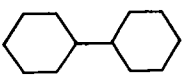

Non-condensed hydrocarbons can also be represented by homologues of dicyclopentyl and cyclopentylcyclohexyl, as well as by systems with a carbon bridge between the rings as in dicyclohexylmethane:

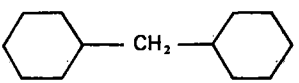

2. Condensed hydrocarbons with two common carbon atoms, and with identical or different rings:

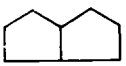

Pentalane,
or dicyclo[3,3,0]octane*

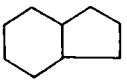

Hydrindane,
or dicyclo[4,3,0]nonane

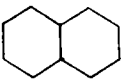

Decalin,
or dicyclo[4,4,0]decane

Hydrindane, decalin and its homologues from mono- to tetramethyl derivatives have been found in many Soviet petroleums. Pentalane has been isolated from California petroleum.

3. Condensed hydrocarbons with internal carbon bridges. Dicycloheptanes, dicyclooctanes, and dicyclononanes, as well as some of their homologues, have been found in various petroleums. Examples are:

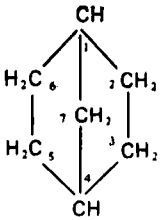

Dicyclo[2,2,1]heptane**
(norbornane)

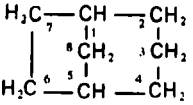

Dicyclo[3,2,1]-
octane

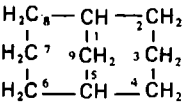

Dicyclo[3,3,1]nonane

Tricyclic cycloalkanes are also present in petroleums in appreciable amounts, but of these hydrocarbons, only tricyclo-[3,3,1,1^{3,7}] decane ($C_{10}H_{16}$) called adamantane and its homologues 1- and 2-methyl-, 1,3-dimethyl, and 1,3,5-trimethyladamantanes have been identified:

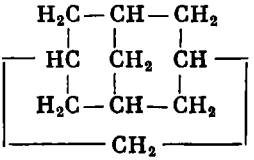

Adamantane

Adamantane was discovered in 1933 in Moravian petroleum (Czechoslovakia). It is a solid hydrocarbon with the crystal lattice of diamond, its density is 1.07 g/cm^3 and melting point is 269 °C. Its content in Soviet petroleums is 0.004-0.01% (by mass). Adamantane derivatives are used in the synthesis of drugs. The majority of the

* The numbers in the brackets indicate: the first—the number of carbon atoms in the outer structure of the larger ring; the second—of the smaller ring (the rings are identical in the given example); the third—the number of internal bridge carbon atoms not belonging to the carbon atoms forming the outer rings (they are absent in this example).

** The numbers at the carbon atoms are the adopted position numbering for indicating the sites of substituents.

tricyclic cycloalkanes apparently have a condensed structure of the type of anthracene perhydride and acenaphthene perhydride:

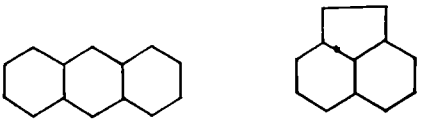

Petroleums have also been shown to contain cycloalkanes with four and five rings, for example, cholestane:

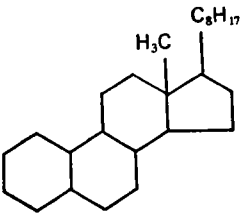

The number of carbon atoms in the side chains of cycloalkanes can vary within broad limits, from 3 to 10 in medium-boiling to 20-28 in high-boiling petroleum fractions. It is more correct to relate the high-molecular cyclic hydrocarbons with a large number of carbon atoms in the alkane chains not to cycloalkanes, but to mixed (hybrid) alkane-cycloalkane hydrocarbons. The polycyclic cycloalkanes with long alkane chains have a high melting point and therefore in the refining of petroleum they get into the paraffin waxes and, chiefly, the ceresines.

The chemical properties of the cycloalkanes are close to those of the alkanes. They are characterized by reactions with the halogens and nitric acid. The products are secondary and tertiary halogen and nitro derivatives. The oxidation of monocyclic cycloalkanes by strong oxidizing agents (nitric acid, potassium permanganate) at elevated temperatures proceeds in such a way that the side chains are oxidized to carbon dioxide and water, while the ring breaks with the formation of dibasic acids. This reaction is of a major industrial significance for the production of adipic acid from cyclohexane.

Cycloalkanes do not react with sulphuric and nitric acids in the cold. A well known reaction is that of the dehydrogenation of cyclohexanes to the relevant arenes (Zelinsky's reaction):

$$C_nH_{2n} \rightarrow C_nH_{2n-6} + 3H_2$$

The use of nitration and dehydrogenation reactions played a tremendous role in establishing the structure of the petroleum cycloalkanes.

At elevated temperatures and in the presence of various catalysts, the cycloalkanes decompose, and also isomerize with a change in the number of carbon atoms in the ring.

The Naftalansk petroleum extracted in Azerbaijan, more than a half of which consists of cycloalkanes and mixed polycyclic hydrocarbons, has interesting physiological properties. It is the only petroleum used for medical purposes. It has an analgesic and resolving action and is employed to heal diseases of the skin, joints, and muscles. This petroleum contains no light fractions and paraffin wax, and its density is close to 1 g/cm^3. The investigations of Kuliev and his co-workers revealed that it is exactly the cycloalkane part of the Naftalansk petroleum that has the healing effect, whereas the gums (resins) and polycyclic arenes separated from it were found to be toxic in the concentrated form.

Arenes. Hydrocarbons of the benzene series were separated from Baku petroleum at the end of the 19th century. The total content of arenes in various petroleums is lower than that of alkanes and cycloalkanes, and averages 10-20%, excluding aromatic petroleums (like that of the Chusovo field), where the arene content is 35%.

The gasoline fractions contain 6-11% of arenes. These are C_6-C_{10} monocyclic hydrocarbons, i.e. benzene and its homologues—toluene, *o*-, *m*-, and *p*-xylenes, ethylbenzene, pseudocumene. The content of alkylbenzenes, especially with short side chains, is higher than that of benzene.

These hydrocarbons have been found in the greatest amounts in gasolines produced from petroleums of the following fields in the USSR: Tungor, Odoptinsk, Pervomaisk (Sakhalin)—23-26%, Prorva (Kazakh SSR)—30%, Buguruslan, North Zirgan (Bashkir ASSR)—20-23%.

The middle petroleum fractions (200-350 °C) in addition to benzene derivatives also contain naphthalene and its closest homologues, i.e. dicyclic condensed arenes of the series C_nH_{2n-12}. Methyl-, ethyl-, dimethyl-, trimethyl-, and tetramethylnaphthalenes are naphthalene homologues that have been discovered in many Soviet petroleums.

The arene content in the middle fractions is always somewhat higher than in the gasoline fractions from the same petroleum, and ranges from 15 to 35%.

More complicated polycyclic arenes with three, four, and five condensed benzene rings have been found in the higher fractions of petroleum. There are indications that they are homologues of acenaphthene, anthracene, phenanthrene, pyrene, benzanthracene, chrysene, and perylene.

It should be noted, however, that petroleums contain very few of such polycyclic purely aromatic hydrocarbons with short alkane side chains because the structure of the molecules of the high-molecular compounds in petroleum is mainly of a mixed (hybrid) nature (see Sec. 1.4).

Benzene and its homologues differ quite substantially in their physical properties from alkanes and cycloalkanes with the same number

of carbon atoms in a molecule. Their densities and refractive indices are higher. Benzene, *p*-xylene, durene, tetra-, penta-, and hexamethylbenzenes melt at a temperature above 0 °C.

The arenes enter comparatively readily into various substitution reactions. The most typical of them are halogenation, sulphonation, nitrating reactions, and also reactions of oxidation of the side chains, alkylation, dealkylation, and hydrogenation of the benzene ring. The sulphonation of benzene and its homologues with concentrated sulphuric acid yields monosulpho acids:

$$C_6H_6 + H_2SO_4 = C_6H_5SO_3H + H_2O$$

In the sulphonation of benzene homologues, the sulpho group finds the *para* position the easiest to occupy, and the *ortho* position more difficult. This is why toluene, *m*- and *o*-xylenes are sulphonated more readily than *p*-xylene where the *para* position is already occupied by a radical. Hexasubstituted compounds do not react with sulphuric acid. The benzene homologues with long side chains are sulphonated with greater difficulty. A reaction with fuming sulphuric acid (oleum) yields di- and trisulpho acids. The treatment of arenes with a nitrating mixture ($HNO_3 + H_2SO_4$) yields nitro derivatives.

In the oxidation of benzene homologues by various oxidizing agents or air, the side alkyl chains transform into carboxyl groups. In this way, the corresponding aromatic acids can be produced. This reaction is of a major practical significance for the synthesis of dibasic phthalic acids.

In the presence of catalysts such as $AlCl_3$ and H_3PO_4, it is comparatively easy to extend the length of the side chains of benzene when it reacts with unsaturated hydrocarbons. This reaction is called the alkylation of benzene. An example is

$$C_6H_6 + CH_2 = CHCH_3 \overset{AlCl_3}{\rightleftharpoons} C_6H_5CH(CH_3)_2$$

The reaction is reversible, and under the appropriate conditions it is possible to produce benzene from its homologues or monoalkylbenzenes from polyalkylbenzenes. All these transformations have been studied very well and have an industrial significance in petrochemical synthesis.

The benzene ring is completely saturated with hydrogen and transforms into the cyclohexane ring over hydrogenating catalysts (Pt, Pd, Ni) under the pressure of hydrogen. Polycyclic arenes can also be hydrogenated completely or partly in a similar way.

The presence of arenes in gasolines is very desirable because they have high octane numbers (see Chap. 3). Conversely, their presence in considerable amounts in diesel fuels (the middle petroleum fractions) impairs the process of fuel combustion. The polycyclic arenes with short side chains that get into the lubricating and similar oil fractions in the distillation of petroleum must be removed in the

process of purification because their presence harmfully affects the service properties of lubricating oils.

Benzene, toluene, ethylbenzene, isopropylbenzene, xylenes, and naphthalene are a very valuable chemical raw material for many processes of petrochemical and organic synthesis, including such important branches of the chemical industry as the production of synthetic rubbers, plastics, synthetic fibres, explosives, aniline dyes, and pharmaceutical substances.

1.4. Hydrocarbons with a Hybrid Structure

A substantial part of the petroleum hydrocarbons has a mixed, or as is now customarily said, a hybrid structure. This signifies that the molecules of such hydrocarbons contain various structural elements, namely, aromatic rings, five- and six-membered cycloalkane rings, and alkane chains. It is quite clear that the combination of these elements can be exceedingly diverse, and the number of isomers tremendous.

The simplest hybrid dicyclic hydrocarbons—tetralin (tetrahydronaphthalene) and some of its homologues—have been discovered in kerosene fractions. Examples of them are:

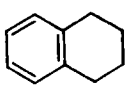

Tetralin

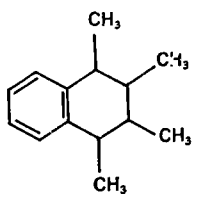

1,2,3,4-Tetramethyltetralin

The presence of tetralin, methyltetralin, dimethyltetralin, ethyltetralin, and tetramethyltetralin in the kerosene fraction of Romashkino petroleum has been proved. Two tetracyclic hydrocarbons—cyclopentanephenanthrene (I) and methylcyclopentanephenanthrene (II) were found in a petroleum:

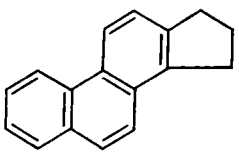

I

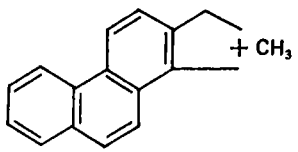

II

The oil fractions consist almost completely of hybrid hydrocarbons. They can be divided into three types, namely, alkane-cycloalkanes, alkane-arenes, and alkane-cycloalkane-arenes.

The hydrocarbons of the first type are either long alkane chains

with a cycloalkane substituent:

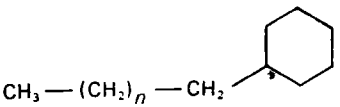

or cycloalkanes with a various number of rings having several shorter side alkane chains, for example:

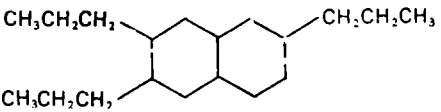

As pointed out by Zherdeva, the content of the alkane-cycloalkane hydrocarbons in the purified distillate oils from Transvolga petroleums reaches 50-70%, while the carbon content in the cyclic part of these compounds can vary from 20 to 60%.

The mixed alkane-arene hydrocarbons probably consist of long alkane chains with phenyl substituents at the chain end. These structures contain not over two aromatic rings. Such hydrocarbons with either cycloalkane or phenyl substituents may be contained in solid paraffin waxes and ceresines. To date, they have not been separated in the pure form. The third type of hydrocarbons with a mixed structure whose molecules contain all the structural elements—arenes, cycloalkanes, and alkanes—are the most widespread among the hydrocarbons of the high-molecular part of petroleum.

At present, very little data are available on the structure of individual representatives of this type of substances. Many researchers presume that the molecules of these hydrocarbons chiefly have a condensed structure. The naphthalene nucleus is the most probable aromatic structure. The total number of rings varies from two to six.

Sergienko's detailed investigations led to the conclusion that the structure of the hybrid hydrocarbons of the oil fractions can be depicted, presumably, by the following structural formulas:

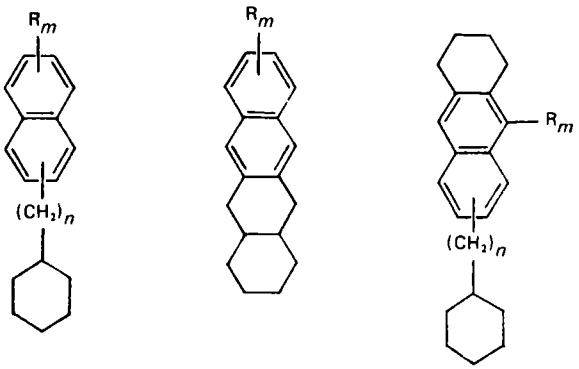

1.5. Compounds Containing Oxygen, Sulphur, and Nitrogen

Oxygen-Containing Compounds. The basic part of the oxygen in petroleum is contained in the resinous substances, and only about 10% of it falls to the share of acidic organic compounds, namely, carboxylic acids and phenols. There are very few neutral oxygen-containing compounds in petroleums. Compounds characterized by the presence of a carboxyl group—petroleum acids—predominate among the acidic compounds. The phenol content in petroleums is negligible (up to 0.1%). Studying of the structure of the petroleum acids separated from the light fractions has revealed that the carboxylic group is most frequently bound to residues of cyclopentane and sometimes cyclohexane hydrocarbons, and considerably more rarely to alkane radicals. Polycyclic acids with cycloalkane, arene, and hybrid radicals have been found in the higher-boiling fractions.

The content of fatty carboxylic acids $C_nH_{2n+1}COOH$ in petroleums does not exceed hundredths of a per cent. Up to 40 individual representatives of these acids with from one to 25 carbon atoms have been identified in various petroleums. Acids with an isostructure, including isoprenoid ones, and with an even number of carbon atoms predominate among them. The carboxylic acids that are derivatives of monocyclic cycloalkanes (naphthenes) with the general formula $C_nH_{2n-1}COOH$ or $C_nH_{2n-2}O_2$, where n is five or six, have been named **naphthenic acids.** Over ten representatives of this class of acids have been isolated from petroleum and studied quite well. The carboxyl group in these acids can be bound directly to the cycloalkane radical or be in the side chain. For example:

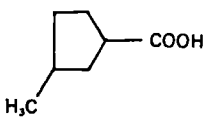

3-Methylcyclopentanecarboxylic acid

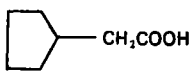

Cyclopentaneacetic acid

Physically, the petroleum acids are either liquids or crystalline substances with an odour similar to that of fatty acids. Their density is close to 1 g/cm³. Chemically, they are also similar to the fatty carboxylic acids. Thus, with alkalies, they form salts, e.g.:

$$C_nH_mCOOH + NaOH \rightleftharpoons C_nH_mCOONa + H_2O$$

This reaction enables one to separate the acids from the petroleum fractions. The alkali-metal salts of these acids, well soluble in water, pass over completely into the water and alkali layer. When this solution is acidified with weak sulphuric acid, the petroleum acids are regenerated, float to the surface, and can thus be separated. But they

also pick up a large amount of neutral oils (from 10 to 60%). A variety of refining methods are used to separate the petroleum acids in the pure state. Many salts of the petroleum acids are brightly coloured. All of them have bactericidal properties.

The petroleum acids form salts not only with caustic alkalies, but also with metal oxides. In the presence of water and at elevated temperatures, they react directly with many metals, also forming salts. This causes the corrosion of metal apparatus. They corrode lead, zinc, and copper most readily, to a smaller extent iron, and least of all aluminium. This is why all the petroleum acids (fatty, naphthenic, and higher) are harmful admixtures and must be removed from petroleum products during their refining. Naphthenic and higher acids are contained in all petroleums, but their amount is generally insignificant. Thus, their content in Samotlor petroleum is only 0.011%. The petroleums of the Azerbaijan SSR, and also of the Groznyĭ and Borislav fields, are the richest in acids (up to 1.0-1.9%). The distribution of the acids by the petroleum fractions is not the same. They are usually absent in the gasoline fractions. They are already present in the kerosene distillates, but in smaller amounts than in the light oil fractions.

The alkali salts of the petroleum acids have good detergent properties. This explains the use of the alkali treatment residues in the production of detergents for the textile industry.

The technical petroleum acids removed from the kerosene and light oil distillates have diverse applications, namely, as solvents of resins, rubber, and aniline dyes; for impregnating railway ties (sleepers); for wetting wool in fulling; in the manufacture of coloured lacquers; as an antiseptic in the textile industry, and so on. Various salts of the naphthenic acids are of just as great significance. Calcium, barium, lead, and aluminium salts are used as thickeners in the production of consistent greases. Barium, zinc, tin, aluminium, cobalt, and nickel salts are additions to lubricating oils. Chromium naphthenate is a good adhesive. Manganese naphthenate is a popular catalyst in paraffin wax oxidizing processes.

Sulphur-Containing Compounds. Most of the petroleums extracted in the USSR are sulphur-bearing and highly sulphurous ones (sour petroleums).

Data on the content of sulphur in the petroleum of selected fields in the USSR (in %) are given below:

Low-sulphur (sweet) petroleums	
Surakhan (Baku)	0.02-0.08
Dossor (Emba)	0.11-0.15
Borislav (Ukrainian SSR)	0.24
Uzensk (Mangyshlak)	0.25
Kotur-Tepe (Turkmen SSR)	0.27
Rechitskoe (Byelorussian SSR)	0.32
Sakhalin	0.33-0.5

Sulphur-Bearing Petroleums	
Mukhanovo (Kuibyshev district)	0.67
Samotlor	0.96
Ukhtinsk	1.12-1.24
Romashkino (Tatar ASSR)	1.61
Ust-Balyk (Western Siberia)	1.77
Highly Sulphurous Petroleums	
Pokrovskoe (Orenburg district)	2.2
Arlan (Bashkir ASSR)	2.9
Mogutovskoe (Orenburg district)	3.0

The above data reveal that the petroleums of the most promising fields of the Volga-Ural petroleum region and Siberia contain considerable amounts of sulphur.

The sulphur-containing compounds of petroleum are distributed unevenly among its fractions. Their content grows with elevation of the boiling range of the fractions (Table 2).

Table 2. **Approximate Distribution (in %) of Sulphur by Fractions in Sulphur-Bearing and Highly Sulphurous Petroleums of the USSR**

Fraction, °C	Petroleum-bearing regions			
	Bashkir ASSR	Tatar ASSR	Orenburg district	Siberia
L.b.-120	0.57	0.25	0.18	0.05
120-200	1.74	1.04	0.67	0.36
200-250	2.50	2.29	1.17	0.72
250-300	3.95	3.13	2.40	1.58

The main part of the sulphur-containing compounds of petroleum have a high molecular mass and a high boiling point. This is why from 70 to 90% of all the sulphur-containing compounds are concentrated in the fuel oil and tar.

The chemical structure of the sulphur-containing compounds of petroleum is quite diverse. Petroleums may contain sulphur dissolved or in the colloidal state, dissolved hydrogen sulphide, mercaptans (thiols), sulphides (thioesters), polysulphides, cyclic sulphides, and thiophene derivatives. Moreover, petroleums, especially their resinous and asphaltene part, contain very complex compounds including sulphur, nitrogen, and oxygen.

Mercaptans are chiefly contained in the gasoline and kerosene fractions. Their content in petroleums is not large. For example, in the Bashkir and Tatar petroleums it ranges from 0.1 to 15.1% of the sulphur-containing compound total. An exception is the Markovo petroleum (East Siberia). Here almost all the sulphur-containing

compounds (the total sulphur content is 0.89%) are represented by mercaptans and are concentrated in the gasoline fraction.

Mercaptans have the structure RSH (where SH is the sulphhydryl group). Methylmercaptan is a gas boiling at 5.9 °C. Ethylmercaptan and its more high-molecular homologues are liquids insoluble in water. The boiling point of the C_2-C_6 mercaptans varies from 35 to 140 °C. The mercaptans have a very unpleasant smell. The latter is so intensive in the lower representatives of the mercaptans that it is detected in negligible concentrations (0.6×10^{-4} to 2×10^{-6}% for C_2H_5SH). This property of mercaptans is utilized in urban gas facilities to warn about a fault in a gas main. They are added to domestic gas as an odorant.

The mercaptans of petroleum have been studied very well. Many individual compounds of this class including primary, secondary, tertiary, and monocyclic mercaptans with from one to eight carbon atoms have been isolated from Soviet and foreign petroleums. Examples are:

C_2H_5SH

Ethylmercaptan

$$\begin{array}{c} H_5C_2 \\ \diagdown \\ H_3C-CSH \\ \diagup \\ H_5C_2 \end{array}$$

tert-hexylmercaptan
(3-Methyl-3-thiol pentane)

$CH_3CH(SH)C_2H_5$

Sec-Butanemercaptan (2-Butane thiol)

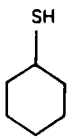

Cyclohexane thiol

When heated to 300 °C, mercaptans form sulphides with the evolution of hydrogen sulphide, while at a higher temperature they decompose into hydrogen sulphide and the corresponding alkene:

$$2C_5H_{11}SH \xrightarrow{300\ °C} C_5H_{11}SC_5H_{11} + H_2S$$

$$C_5H_{11}SH \xrightarrow{500\ °C} C_5H_{10} + H_2S$$

In their chemical properties, the mercaptans remind one of alcohols. They form mercaptides with alkalies and oxides of the heavy metals. The higher the molecular mass of mercaptans, the more readily are their mercaptides hydrolyzed by water, which hinders their removal in alkaline purification:

$$2C_4H_9SH + HgO \rightarrow C_4H_9SHgSC_4H_9 + H_2O$$

$$C_4H_9SH + NaOH \rightarrow C_4H_9SNa + H_2O$$

Weak oxidizing agents and even the air oxidize mercaptans to disulphides, and strong ones, to sulphoacids:

$$2C_3H_7SH \xrightarrow{O_2} C_3H_7SSC_3H_7 + H_2O$$

$$C_3H_7SH \xrightarrow{HNO_3} C_3H_7SO_2OH$$

The mercaptans are a very harmful admixture to commercial products because they cause corrosion, especially of non-ferrous metals, promote gum formation when cracking gasolines, and impart an abominable smell to petroleum products.

Elemental sulphur, hydrogen sulphide, and mercaptans, which are very aggressive substances, are the most undesirable constituents of petroleum. They must be completely removed in purification processes, and their presence in commercial products must be strictly controlled.

Aliphatic sulphides have the structure RSR′. They are liquids with an unpleasant smell. The sulphides from C_2 to C_7 have low boiling points (37-150 °C) and get into the gasoline fraction in the distillation of petroleum.

Sulphides are the main part of the sulphur-containing compounds that get into the light fractions in distillation. Their content in gasolines, kerosenes, and diesel fuel ranges from 50 to 80% of the overall amount of sulphur-containing compounds in these fractions. Like the mercaptans, the sulphides of petroleum have been studied very well. About 180 individual representatives of mercaptans and sulphides have been isolated or identified in many petroleums.

In their chemical properties, sulphides are neutral substances that do not react with alkalies and dissolve well in sulphuric acid. They can yield stable complexes with many substances such as mercury(II) chloride, hydrogen fluoride, boron fluoride, and sulphur dioxide.

Strong oxidizing agents oxidize sulphides to sulphones (via sulphoxides):

$$C_2H_5SC_2H_5 \xrightarrow{KMnO_4} (C_2H_5)_2SO \rightarrow (C_2H_5)_2SO_2$$

At 400 °C and higher, the sulphides decompose into hydrogen sulphide and alkenes:

$$CH_3CH_2SCH_2CH_2CH_3 \rightarrow C_2H_4 + C_3H_6 + H_2S$$

Disulphides RSSR have also been found in small amounts in some petroleums. When heated, they evolve sulphur, hydrogen sulphide, and mercaptans.

The **monocyclic sulphides** found in petroleums are saturated five- or six-membered heterocyclic rings with a sulphur atom:

Thiophane
(tetramethylene sulphide)

Pentamethylene sulphide
(cyclohexyl sulphide)

Thiophane (C_4H_8S) is a liquid boiling at 121.12 °C, with an unpleasant smell. Pentamethylenesulphide ($C_5H_{10}S$) boils at 141.8 °C.

Cyclic sulphides do not react with metals. They are thermally more stable than sulphides with an open chain. About 20 individual representatives of monocyclic sulphides, chiefly methyl and polymethyl derivatives of thiophane, have been separated from various petroleums.

Thiophene (C_4H_4S) was discovered in 1882 in coal tar:

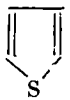

Subsequently, thiophene and its homologues were discovered in the products of high-temperature petroleum processing, and recently, also in fractions of primary distillation.

Thiophene and its homologues are liquids with a characteristic odour close in their physical and chemical properties to aromatics. Thiophene dissolves well in sulphuric acid, and this property is employed to purify coal benzene from it.

The **polycyclic sulphur-containing compounds** get into the kerosene and oil fractions in distillation. It is an exceedingly difficult task to isolate individual high-molecular sulphur-containing compounds from petroleums. Many researchers consider that the most probable types of high-molecular sulphur-containing compounds are those in which the main structural elements are represented by the following compounds: benzthiophene (I), benzthiophane (II), thiocycloalkane (III), dibenzthiophene (IV), and naphthothiophene (V):

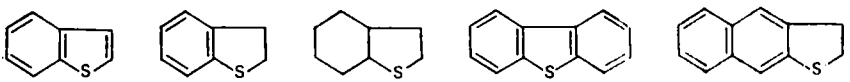

I II III IV V

Compounds with a more complicated structure of their molecules (VI, VII) are encountered in the high-molecular part of petroleum (fuel oil, tar), which is responsible for 70-90% of all the sulphur-containing compounds in petroleum:

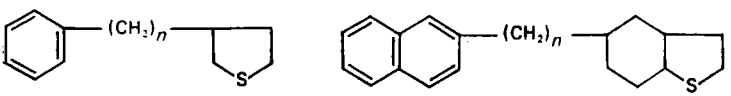

VI VII

Nitrogen-Containing Compounds. The amount of organic nitrogen-containing compounds in petroleums does not exceed 2-3% on an average, while its maximum (in highly resinous petroleum) is 10%.

A major part of the nitrogen is concentrated in the heavy fractions and in the residual products. The nitrogen-containing compounds in petroleum are divided into basic and neutral ones.

Substances of a **basic** nature can be separated from petroleum by treatment with weak sulphuric acid. The amount of nitrogen-containing bases averages 30% of the sum of all nitrogen compounds. In distillation, they get into the distillate products. The nitrogen-containing bases of petroleum are heterocyclic compounds with a nitrogen atom in one of the rings, and with from one to three rings. They are chiefly homologues of pyridine (VIII), quinoline (IX), isoquinoline (X), and also to a smaller extent acridine (XI):

VIII

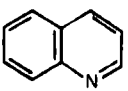

IX

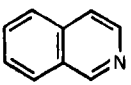

X

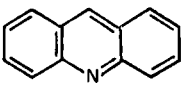

XI

At present, the structure of many of the closest homologues of nitrogen-containing bases of these classes isolated from petroleum has been established. Pyridine and its homologues are liquids with a pungent odour. Pyridine boils at 115.26 °C and is a good solvent. Quinoline and isoquinoline boil at about 240 °C. Isoquinoline melts at 25 °C. Acridine is a crystalline substance melting at 107 °C.

Neutral substances form the major part (up to 80%) of the nitrogen-containing compounds of petroleum and are concentrated in its high-molecular fractions. Their structure and properties have been studied only slightly. We can state without any doubt that some petroleums contain homologues of pyrrole (XII), indole (XIII), and carbazole (XIV):

XII

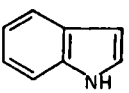

XIII

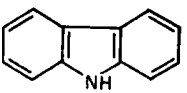

XIV

Both the basic and neutral nitrogen-containing compounds are sufficiently stable thermally, especially in the absence of oxygen, and do not affect appreciably the service properties of petroleum products. It has been noted, however, that when diesel fuels and fuel oils are stored, some nitrogen-containing compounds cause increased gum formation.

Porphyrins (XV) occupy a special place among the nitrogen-containing compounds. They have been found in many petroleums in the free state, but more frequently in the form of complexes with vana-

dium, nickel, or iron. A complex with vanadium is shown below:

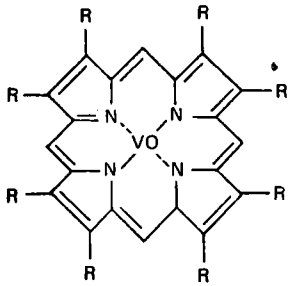

XV

Their molecular mass ranges from 420 to 560 ($C_{27}N_4$ to $C_{33}N_4$). In their structure, they are close to the chlorophyll of plants and the pigment of blood—haemin.

Mineral Components. To date, over 40 different elements have been found in petroleums. They can be divided into three groups: 1—metals with a varying oxidation state (V, Ni, Fe, Mo, Co, W, Cr, Cu, Mn, Pd, Ag, Ti), 2—alkali and alkaline-earth metals (Na, K, Ba, Ca, Sr, Mg), and 3—halogens and other elements (Cl, Br, I, Si, Al, Zn, etc.).

Their total content rarely exceeds 0.02-0.03%. The low concentration of these elements makes it difficult to determine the structure of the compounds containing them.

It has only been established that vanadium and nickel, whose content is larger than that of the other elements being considered here (from thousandths to hundredths of a per cent), are contained in the porphyrins.

The knowledge of the composition and content of the microelements is important for matters of petroleum processing because vanadium, nickel, and other metals are catalyst poisons, while vanadium oxides can corrode fuel equipment.

1.6. Resinous and Asphaltenic Substances

These substances do not relate to a definite class of organic compounds. They are the most high-molecular hetero-organic substances of petroleum simultaneously containing carbon, hydrogen, oxygen, sulphur, and often nitrogen and metals. Their volatility is not high, therefore in the fractionation of petroleum they are chiefly concentrated in the residual products. They do not get into the gasoline distillate. The higher the limits of fraction distillation, the more resins (gums) are distilled along with them. But their content in all the distillates does not exceed 15% of their total amount in the petroleum.

The resinous substances are thermally and chemically unstable and comparatively readily oxidize, condense, and when heated decompose. These substances are generally neutral. Their separation into individual components is meanwhile an absolutely impossible task. This is why they are studied by simplifying their composition, i.e. concentrating and separating narrower fractions having common properties. With respect to their chemical features, only an insignificant amount of substances of an acidic nature—the **asphaltogenic acids** could be separated. Their content in natural asphalts reaches 6-7%. In their appearance, these are viscous dark resins. They dissolve in alcohol, benzene, and chloroform. Their density exceeds 1 g/cm^3. The asphaltogenic acids have been given little attention by researchers. They react with alkalies, but differ in many properties from the petroleum acids.

The classification of the neutral resinous substances is based on their relation to various solvents. The following groups are distinguished here: (1) neutral resins soluble in light gasoline (petroleum ether), pentane, and hexane; (2) asphaltenes insoluble in petroleum ether, but soluble in hot benzene; (3) carbenes partly soluble only in pyridine and carbon disulphide; and (4) carboides—substances virtually insoluble in anything.

The main part of all the hetero-organic high-molecular substances relates to neutral resins. Petroleums contain considerably less asphaltenes than neutral resins. Carbenes and carboides are almost absent in crude petroleums, they are characteristic of the residual products obtained in the thermocatalytic refining of petroleum fractions. The overall content of resinous and asphaltenic substances in various petroleums varies within broad limits, from 1-2 to 40-45%. At present, the fraction of high-resinous petroleums has sharply grown in the world's output of this product.

The content (in %) of resins and asphaltenes in petroleums of various fields of the USSR is given below:

	Resins	Asphaltenes
Surakhan (Baku)	4.0	0
Markovo (East Siberia)	4.7	0
Kotur-Tepe (Turkmen SSR)	6.4	0.7
Samotlor (West Siberia)	10.0	1.36
Romashkino (Tatar ASSR)	11.6	4.2
Dolinskaya (Ukrainian SSR)	14.3	0.6
Ust-Balyk (West Siberia)	15.4	2.6
Arlan (Bashkir ASSR)	16.6	5.8
Uzensk (Mangyshlak)	17.5	0.2
Kokhanov (Ukrainian SSR)	27.1	17.3
Uch-Kizyl (Uzbek SSR)	34.8	3.9
Kzyl-Tushmuk (Uzbek SSR)	38.7	5.7

Neutral resins dissolve well in light gasoline, in petroleum oils, and also in benzene, ether, and chloroform. The resins separated from

petroleum distillates have a liquid or semiliquid consistence. Those separated from tars are almost solid, but quite plastic substances (with a molecular mass from 500 to 1200). Their specific gravity (relative density) varies from 0.99 to 1.08. The heteroatom content (O, S, N) ranges from 3 to 12%.

Resins have a strong colouring ability. The dark colour of distillates, and also of crude petroleum, is chiefly due to the presence of neutral resins in them. A feature of neutral resins is their ability to become compacted into asphaltenes under the influence of factors such as heating and treatment with adsorbents or sulphuric acid. This process occurs especially readily with heating and the simultaneous blowing of air over the material.

Asphaltenes are the most high-molecular hetero-organic compounds of petroleum. They are brown or black powdery substances. Their specific gravity exceeds unity, and their molecular mass is about 2000. With respect to their elemental composition, the asphaltenes differ from the neutral resins in containing less hydrogen (by 1-2%) and, accordingly, more carbon and heteroatoms. Asphaltenes dissolve in gasoline, carbon disulphide, chloroform, carbon tetrachloride, in high-molecular aromatics and resins, but do not dissolve in light gasoline, alcohol, and ethyl ether. The asphaltenes are lyophilic colloids with respect to benzene, resins, etc., and lyophobic with respect to light gasoline and alcohol. This is why they dissolve well with swelling in substances of the first group and are precipitated from solutions by substances of the second one. It thus follows that asphaltenes are contained in petroleums in the form of colloidal systems.

When heated, asphaltenes soften, but do not melt. At temperatures above 300 °C, they form coke and a gas. When treated with sulphuric acid, when tars are heated with air blown over them, or in the presence of sulphur, asphaltenes can be compacted into substances having a still higher molecular mass enriched in carbon and oxygen—carbenes.

In summarizing the information available on the resinous and asphaltenic substances in petroleum, we can say that both neutral resins and asphaltenes are very complicated mixtures of high-molecular heteroatomic compounds. They differ from one another (and sometimes very significantly) in their molecular mass, elemental composition, and degree of unsaturation. In the general formula (without heteroatoms) C_nH_{2n-x}, the value of x in neutral resins ranges from 10 to 34, while for asphaltenes it can reach 100-120.

All resinous substances, and especially asphaltenes, carbenes, and carboides, affect the quality of lubricating oils very adversely. They impair the colour of oils, increase carbon deposition, lower the lubricating ability, etc. Consequently, in the purification of oil distillates, the removal of resinous and asphaltenic substances is one of

the primary tasks. At the same time, resinous substances have a number of valuable technical properties and, being contained in petroleum asphalts, impart properties to them that make possible the widespread utilization of the residual products for diverse applications in the national economy. They are chiefly employed for road pavements, dampproofing materials in the building industry, and for producing roofing materials.

1.7. Physical Properties

Density (Specific Gravity). Petroleums and their products are characterized both by their absolute density, generally called simply density, measured in g/cm^3 or kg/m^3, and their specific gravity (relative density). The latter is a dimensionless quantity equal to the ratio of the mass of a petroleum product to that of pure water at 4 °C taken in the same volume as the product. The standards for petroleum products in force in the USSR indicate the specific gravity measured for the petroleum products at 20 °C and designated d_4^{20}.

The average specific gravity of petroleums ranges from 0.82 to 0.90, but there are both lighter (0.720) and heavier (0.959) ones. The specific gravity of petroleums and its products is the average value of all the components.

With elevation of the temperature limits of boiling out of the petroleum products, their specific gravity grows.

The specific gravities of selected petroleums and their fractions are given below:

	Ust-Balyk	Surgut	Samotlor	Sovetskaya
Petroleum	0.8704	0.8922	0.8426	0.8400
Fractions, °C:				
62-105	0.7080	0.6908	0.7078	0.6943
105-120	0.7320	0.7256	0.7300	0.7292
120-240	0.7756	0.7750	0.7917	0.7935
240-350	0.8417	0.8298	0.8587	0.8564
350 (fuel oil)	0.9508	0.9545	0.9355	0.9482
500 (tar)	0.9864	0.9824	0.9959	1.0022

The specific gravity of gasoline usually averages 0.750, of kerosene—0.800, of diesel fuel—0.85, of fuel oil—0.95, and of lubricating and similar oils from 0.880 to 0.930.

With an identical boiling range, petroleum products containing more arenes have a higher specific gravity.

The specific gravity of petroleum products depends on the temperature and decreases when they are heated. Knowing the specific gravity of a product at 20 °C, we can find it for the temperature t °C by the formula

$$d_4^t = d_4^{20} - \gamma (t - 20) \tag{1.1}$$

where γ is the coefficient of volume expansion (its values are given in reference literature).

For petroleum gases, the relative density or specific gravity is the ratio of the mass of a gas to that of air in the same volume under identical conditions of temperature and pressure.

Molecular Mass. The molecular mass of petroleum and its products has only an averaged value and depends on the composition and quantitative relation of the mixture components. Pentane, the first representative of the liquid hydrocarbons of petroleum, has a molecular mass of 72. For the resinous substances of petroleum, the molecular mass can reach 1500-2000. For many petroleums, the average molecular mass ranges from 250 to 300. With an increase in the boiling range of the petroleum fractions, their molecular mass (M_{av}) smoothly grows from 90 (for the 50-100 °C fractions) to 480 (for the 550-600 °C fractions). Voinov's formula can be used for simplified calculations:

$$M_{av} = 60 + 0.3t_{av} + 0.001t_{av}^2 \quad (1.2)$$

where t_{av} is the average boiling point, °C, determined from the data of standard fractionation.

But this formula can be applied chiefly only for fractions rich in alkanes.

If we also know the values of the specific gravity d_4^{20} and the refractive index n_D^{20}, we can calculate M_{av} with greater accuracy by the formula:

$$M_{av} = 1.9778 + 0.001\,92t_{av} + \log(n_D^{20} - d_4^{20}) \quad (1.3)$$

Various plots of M_{av} against the average boiling point, specific gravity, or some other characterizing factor are employed for practical technological calculations.

The molecular masses of the individual petroleum fractions have the property of additivity. Therefore, knowing the molecular mass of the individual components and their content in the mixture, one can calculate its average molecular mass.

Viscosity. The viscosity, or internal friction, of petroleum and its products depends on the chemical and fractional composition. Dynamic and kinematic viscosities are distinguished.

The kinematic viscosity of petroleums from various fields fluctuates within rather broad limits from 2 to 300 mm²/s at 20 °C. On an average, however, the viscosity (ν_{20}) of most petroleums rarely exceeds 40-60 mm²/s. The kinematic viscosity is a fundamental physicomechanical characteristic of petroleum lubricating oils. It is exactly the viscosity that underlies the ability of a lubricating oil to provide hydrodynamic lubricating conditions at the working temperature, i.e. ensure the substitution of liquid friction for dry friction and thus prevent wear of a material. This is why the

viscosity (ν_{50} or ν_{100}) is a rated index for lubricating oils intended for a definite type of machines and mechanisms.

The dynamic and kinematic viscosities are determined in glass viscosimeters of a special design provided with calibrated capillaries. For many petroleum products, the conditional viscosity (outflow time), determined in special metallic (Saybolt Universal, Saybolt Furol, Redwood, Engler, etc.) viscometers, is rated.

The conditional viscosity is the ratio of the time needed for 200 ml of the product being tested to flow from a viscometer at the temperature of the test to the time needed for 200 ml of distilled water to flow from it at 20 °C. The conditional viscosity is a relative (consequently, dimensionless) quantity and is expressed in conditional degrees. The relevant reference literature and standards contain tables of the relations between the conditional and kinematic viscosities.

With an increase in the molecular mass and boiling point of petroleum fractions, their viscosity grows appreciably. Thus, if the viscosity of gasolines at 20 °C is about 0.6 mm^2/s, then for the heavy residual oils ν_{20} is of the order of magnitude of 300-400 mm^2/s. Resinous substances have the highest viscosity among the individual petroleum components. Normal alkanes including molten paraffin wax have the lowest viscosity among the hydrocarbons, and the arenes have the highest viscosity.

In the production of lubricating oils, it is often necessary to know the viscosity of mixtures of various fractions. Since the viscosity of oils does not have the property of additivity, the viscosity of a mixture cannot be calculated as a weighted mean quantity. To determine the viscosity of mixtures from the data for its individual components, one must use the nomogram on the front fly-leaf. It can also be used to determine the proportions in which components must be mixed to obtain oils with a preset viscosity.

The viscosity of petroleum products depends on the temperature. At low temperatures, especially ones close to the pour point, the viscosity of most petroleum products grows sharply. At elevated temperatures, the products become more fluid (Fig. 1).

The temperature dependence of the viscosity is individual for each petroleum product. It is best of all to determine the viscosity at the required temperature in a laboratory. To find the viscosity of a product at any temperature, empirical formulas can be used.

The most popular of them is Walter's formula

$$\log \log (\nu_t + 0.6) = A - B \log T \qquad (1.4)$$

where A and B are constants.

In this form, Eq. (1.4) enables one to plot the temperature dependence of the viscosity on a logarithmic coordinate grid as straight

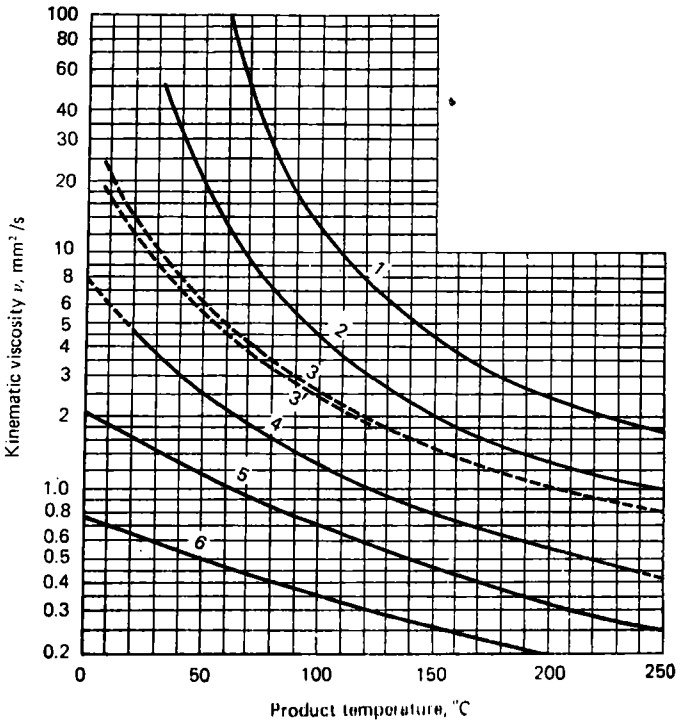

Fig. 1. Kinematic viscosity against the temperature of petroleum products obtained from paraffinic sour petroleum:

1—fuel oil, $d = 0.939$; *2*—vacuum distillate, $d = 0.906$; *3*—desalinated petroleum, $d = 0.867$ ($p = 4$ MPa); *3'*—the same, $p = 0.5$ MPa; *4*—diesel fuel, $d = 0.838$; *5*—jet fuel, $d = 0.789$ ($p = 2.5$ MPa); *6*—gasoline, $d = 0.698$ ($p = 4$ MPa)

lines. Hence, knowing the viscosity at any two temperatures, one can use the plot to find the viscosity of the product in question at any temperature.

Since many oils and other petroleum products are used within a broad temperature interval, the nature of the viscosity temperature curve is an important qualitative characteristic for them. The gentler the slope of this curve, the higher is the quality of the oil.

A number of indices are employed to assess the viscosity-temperature properties of petroleum oils. They include the ratio of the viscosity at 50 °C to that at 100 °C and the **viscosity index** (I), widely used throughout the world for assessing the viscosity-temperature properties of oils. The viscosity index is determined by comparing the viscosity of oils with standard or reference oils having a VI of 100 and 0.

In the USSR, the VI is determined from the values of the **viscosity**

of an oil at 50 and 100 °C using tables of the Committee of Standards and Measuring Instruments. Reference literature contains nomograms for determining the VI from these data.

The viscosity and VI of oils depend on the nature of the petroleums from which they have been produced. Oils from paraffinic petroleums generally have a lower viscosity and higher VI than the corresponding oils from resinous ones.

Flash, Ignition, and Self-Ignition Points. The vapours of all combustible substances when mixed with air form explosive mixtures that ignite (explode) if a foreign source of flame is present. Depending on the concentration of the vapour of a combustible liquid or gas in the air, the lower and upper explosive limits are distinguished.

The lower limit corresponds to the minimum concentration of fuel vapour in the mixture with air at which it flashes when a flame is brought up to it. The upper explosive limit corresponds to the maximum concentration of fuel vapour in the mixture with air above which no flash occurs because of the lack of oxygen. The narrower the explosive limits, the safer is a given fuel, and, conversely, the broader they are, the more explosive is the fuel. The explosive limits of most hydrocarbons are quite narrow. The broadest limits are found in some gases, namely, hydrogen (4.0-75%), acetylene (2.0-81%), and carbon monoxide (12.5-75%).

The fire hazard of kerosenes, oils, fuel oils, and other heavy petroleum products is assessed by the flash and ignition points.

The **flash point** is defined to be the temperature at which the vapour of a petroleum product heated under definite standard conditions forms an explosive mixture with the surrounding air and ignites when a flame is brought up to it. It should be noted that when determining the flash point of gasolines and light petroleums, the upper explosive limit is found, and when determining it for the other products, the lower one.

The flash point depends on the distillation range of the products. The lower this range of a petroleum product, the lower is its flash point. The average flash point of gasolines ranges from —30 to —40 °C, of kerosenes, from 30 to 60 °C, of diesel fuels from 30 to 90 °C, and of petroleum oils from 130 to 320 °C. The flash point tells us about the presence of admixtures of lower-boiling fractions in a commercial or intermediate product.

The **ignition point** is the temperature at which a product heated under definite conditions ignites when a flame is brought up to it and burns for at least five seconds. The ignition point is naturally always higher than the flash point. The heavier a petroleum product, the larger is this difference, and it can reach 50 °C. Conversely, when oils contain volatile admixtures, these points come closer to each other.

The **self-ignition point** is the temperature at which a heated product in contact with the air ignites spontaneously without any external source of flame. The self-ignition point of petroleum products depends both on their distillation range and on what class of hydrocarbons predominate in them. The lower the boiling range of a petroleum fraction, i.e. the lighter it is, the less dangerous is it from the viewpoint of self-ignition because this point lowers with a growth in the average molecular mass of a product. The heavy petroleum residues ignite spontaneously at 300-350 °C, while the gasolines do only at a temperature above 500 °C.

Matters change sharply when a flame or a spark appears, for example owing to the accumulation of static electricity. The light-end products become fire and explosion hazards.

Hydrocarbons varying in their structure, but with the same molecular mass, differ greatly from one another in their self-ignition points. The latter are the highest for the aromatics.

Pour Point. Petroleum and its products do not have a definite temperature of transition from one state of aggregation to another. When the temperature drops, part of the components of this complicated mixture gradually become more viscous and less fluid, while the dissolved solid hydrocarbons can separate in the form of precipitates or crystals. This phenomenon has a very adverse effect on handling and transportation operations and on the use of petroleum products at low temperatures.

The following purely conditional indices have been introduced to characterize the low-temperature properties of petroleum products: for petroleum, diesel and boiler fuels, and petroleum oils—the pour (congelation) point; for carburettor, jet-engine, and diesel fuels—the cloud point; for carburettor and jet-engine fuels containing arenes—the freezing point. All these points are determined under strictly standard conditions and are used to assess the proper quality of commercial products.

The **pour point** is not a physical constant, but characterizes the possible loss of fluidity by a product in the zone of definite low temperatures. The presence of paraffin waxes and ceresines is the main factor raising the pour point of petroleum products. The pour point grows when the content of paraffin waxes is greater. The residual highly viscous products even in the absence of solid hydrocarbons lose their fluidity at low temperatures, they congeal, as it were, because of the sharp increase in the viscosity and cannot be poured. For example, the kinematic viscosity of a specimen of residual aviation oil is 200 mm^2/s at 50 °C. At 0 °C, it increases to 1.3×10^4, and at —25 °C to 3.5×10^5 mm^2/s. At such a high viscosity, the oil loses its fluidity and cannot be pumped.

The **cloud point** indicates the ability of fuels to absorb moisture from the air at low temperatures. Further cooling causes this mois-

ture to form minute ice crystals that clog up the fuel-feed devices. This can never be tolerated, especially in the operation of aviation engines.

The **freezing point** (i.e. the point when crystallization or freezing begins) of gasolines and jet fuels must not be higher than —60 °C. With an increased content of benzene and some other arenes, these high-melting compounds can separate from fuel in the form of minute crystals, which also leads to the clogging up of fuel filters.

Electrical Properties. Anhydrous petroleum and its products are insulators (dielectrics). The value of the relative permittivity ε of petroleum products is about two, which is one-third or one-fourth of its value for insulators such as glass ($\varepsilon = 7$), porcelain ($\varepsilon = 5$-7), and marble ($\varepsilon = 8$-9). The electrical conductance of anhydrous, pure petroleum products is absolutely negligible. This property is widely used in practice. Thus, solid paraffin waxes are used in the electrical engineering industry as an insulator, while special petroleum oils (transformer, capacitor) are used for pouring into transformers, capacitors, and other apparatus in the electrical and radio industries. High-voltage insulator oil of Grade C-220 is used for filling high-pressure cables. In all the above cases, the petroleum oils are employed for isolating the live parts and partly for removing heat.

The high insulating properties of petroleum products facilitate the accumulation of static electricity charges on their surface. Their discharge may cause a spark and, consequently, ignition of the products, which results in fires and explosions. The static electricity may form because of the most diverse reasons. For example, charges, sometimes with a very high potential, appear in the pumping of products as a result of friction against the pipes or impacts of the liquid stream. A reliable measure for eliminating the accumulation of static electricity is the earthing (grounding) of all metallic parts of equipment, pumps, pipelines, etc.

Optical Properties. The optical properties of petroleum include its colour and fluorescence. The hydrocarbons of petroleum are colourless. A colour is imparted to petroleums by resinous, asphaltenic, and, probably, sulphur-containing compounds. Consequently, when a petroleum is heavy and contains a lot of resins and asphaltenes, its colour is darker than that of its less heavy counterparts. The deep purification of petroleum distillates can yield colourless products, even high-molecular ones such as oil and paraffin wax.

Fluorescence signifies glow in reflected light. This phenomenon is typical of crude petroleums and products. Everyone knows how oil pollutants floating on the surface of water are iridescent, or the specific bluish tint kerosene has in the light. The causes of the fluorescence of petroleum are not known exactly. But individual substances capable of fluorescence and producing a glow when added

to petroleum are known. These are various polycyclic arenes. Deep purification eliminates fluorescence. Fluorescence is of no practical significance, but it should be extinguished if the relevant petroleum fraction is used as the working fluid in instruments.

Frequently physical constants associated with optical phenomena are employed in studying the chemical composition of petroleum. They include the refractive index n_D^{20} (the subscript D signifies that the refractive index has been determined in sunlight, which corresponds to the wavelength of the yellow line in the spectrum of sodium vapour $\lambda = 589$ nm) and complex constants: the specific refraction, the refractometric difference, and the specific dispersion.

The **specific refraction** r is determined by the Lorentz-Lorenz law

$$r = \frac{n_D^2 - 1}{n_D^2 + 2} \cdot \frac{1}{d} \tag{1.5}$$

or by the Gladstone-Dale law

$$r = \frac{n_D - 1}{d} \tag{1.6}$$

In both formulas, n_D and the specific gravity d are for the same temperature.

The **refractometric difference** (refraction intercept) R_t also combines the specific gravity and refractive index:

$$R_t = n_D^{20} - d_4^{20}/2 \tag{1.7}$$

This quantity has a constant or almost constant value for individual classes of hydrocarbons, namely, 1.0461 for alkanes, 1.0400 for monocyclic cycloalkanes, 1.0285 for polycyclic cycloalkanes, and 1.0627 for monocyclic arenes.

The **specific dispersion** δ is defined to be the ratio of the difference of the refractive indices for two different parts of the spectrum to the specific gravity:

$$\delta = \frac{n_F - n_C}{d} \times 10^4 \tag{1.8}$$

where n_F and n_C are the refractive indices for the light blue ($\lambda = 4861$ nm) and the red ($\lambda = 6563$ nm) lines of hydrogen.

Dissolving Ability and Solubility of Petroleum and Hydrocarbons. Petroleum and the liquid hydrocarbons are good solvents of iodine, sulphur, sulphur-containing compounds, various resins and gums, vegetable and animal fats. This property is widely used in engineering. The oil-refining industry produces special gasoline fractions as solvents for the rubber, oil-mill, paint and varnish, and other branches of industry. Various gases such as air, carbon monoxide and dioxide, hydrogen sulphide, and gaseous alkanes also dissolve in petroleum and its products. The solubility of gases is higher

when the pressure is higher and the temperature is lower. Gases with a higher molecular mass dissolve better in petroleum products, while the heavy products, in turn, dissolve gases better than the light ones. This phenomenon is utilized to separate gases into their components.

The solubility of petroleum products in water and of water in the products is very low—from thousandths to hundredths of a per cent.

When the use of petroleum products requires that no water be present, even in the most negligible amounts, its content is controlled by special methods of analysis. Of the hydrocarbons, the alkanes have the lowest solubility in water, while the arenes dissolve to a somewhat greater extent.

Petroleum products are mutually soluble to a limited extent with some organic solvents, namely, aniline, liquid propane, phenol, furfural, and dichloroethane.

Since the products are not homogeneous, their components dissolve differently. Some dissolve better, others worse, and third ones do not dissolve at all, i.e. dissolution occurs selectively.

The temperature is a decisive factor when employing selective solvents. Any solvent-solute system is characterized by the temperature at which and above which complete dissolving sets in, i.e. the **critical solution** or **consolute temperature** (CST). If a mixture contains substances dissolving in a given solvent at different temperatures, they can be separated quantitatively. This is just what underlies the principle of using selective solvents for purifying oils.

1.8. Thermal Properties of Hydrocarbons and Petroleum Fractions

The thermal conductivity, heat capacity, and other thermophysical constants of hydrocarbons depend on their molecular composition, the structure of the molecules, and the ambient conditions (temperature and pressure). The thermophysical constants of mixtures of petroleum hydrocarbons and fractions depend on the relevant properties of the components and are closely related to the density, molecular mass, and average boiling point of the product being studied.

The influence of the chemical composition on the physical and thermal properties of petroleum fractions is taken into consideration by the **characterization factor** K_w:

$$K_w = \frac{1.216\sqrt[3]{T_{av.mol}}}{d_4^{20} + 0.0092} \qquad (1.9)$$

where $T_{av.mol}$ is the average molar boiling point, K.

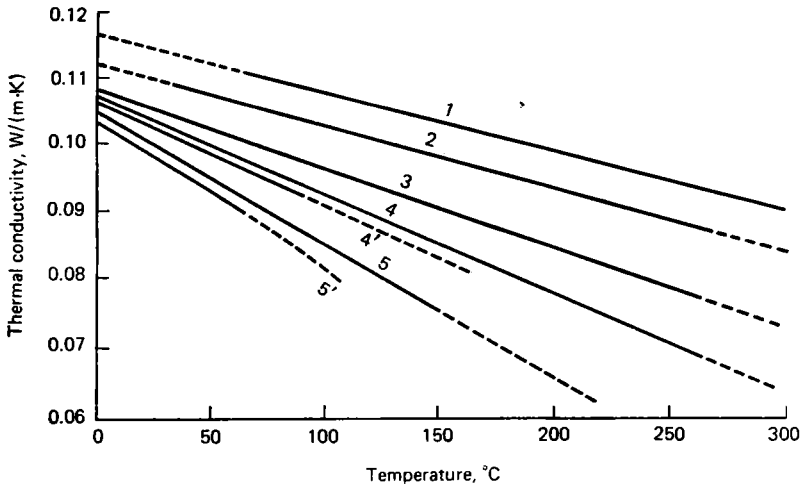

Fig. 2. Thermal conductivity of the products of straight distillation of paraffinic and sour petroleum against the temperature:

1—fuel oil, $d = 0.939$; *2*—vacuum distillate, $d = 0.9096$; *3*—diesel fuel, $d = 0.838$; *4*—jet fuel, $d = 0.789$ ($p = 2.5$ MPa); *4'*—the same, $p = 0.15$ MPa; *5*—gasoline, $d = 0.688$ ($p = 4$ MPa); *5'*—the same, $p = 0.15$ MPa

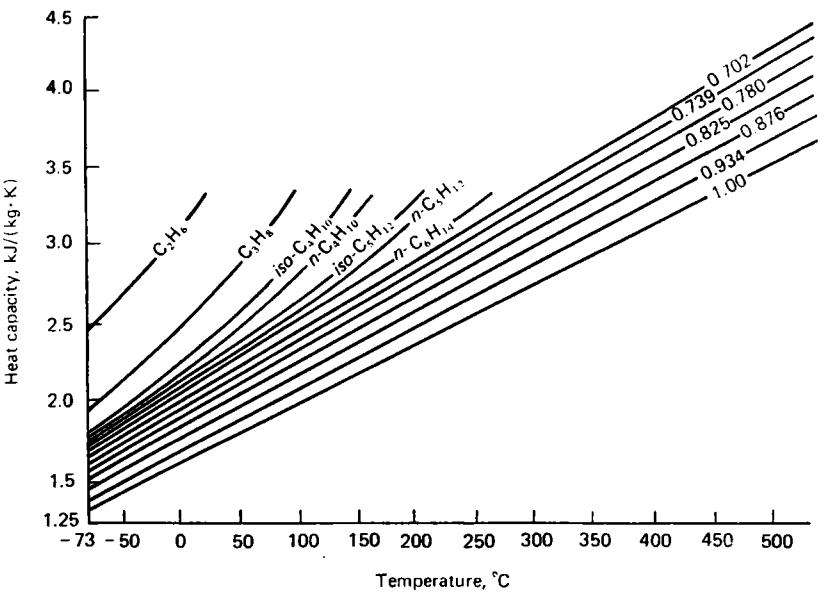

Fig. 3. Heat capacity of hydrocarbons and petroleum fractions at atmospheric pressure against the temperature

The value of K_w ranges from 10 to 13. Since the specific gravity of arenes is the highest, then K_w for aromatized fractions has the lowest value.

Thermal Conductivity. The thermal (heat) conductivity characterizes the process of heat propagation in a stationary substance due to motion of the molecules, i.e. to heat transfer. The thermal conductivity depends to a large extent on the temperature. For gases and vapours it grows, and for liquids it drops with increasing temperature (Fig. 2). Alkanes and di- and tricyclic structures with long side chains have the highest thermal conductivity.

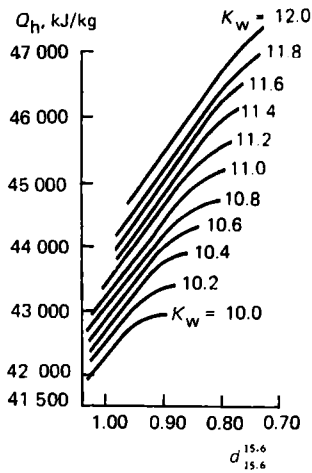

Fig. 4. Relation between the heat of combustion, specific gravity, and characterization factor of petroleum products

Heat Capacity. The heat capacity of petroleum products depends on the density (specific gravity) and temperature. Figure 3 shows this relation for alkanes from ethane to hexane and petroleum fractions with a specific gravity from 0.702 to 1.00. The heat capacity is also affected to a certain degree by the chemical composition of the petroleum fractions. It is the highest for alkanes and the lowest for arenes.

The heat capacity has the following meaning: if heat is supplied at the same rate to products with different heat capacities, the one with the lower heat capacity will be heated to a higher temperature.

Enthalpy (Heat Content). The enthalpy for liquids and vapours is distinguished. The enthalpy of a liquid is defined to be the amount of heat in kilojoules needed to heat 1 kg of a given liquid from 0 °C to the given temperature. The enthalpy of petroleum fractions is affected by their specific gravity and chemical composition.

The enthalpy of a vapour I is the amount of heat needed to heat the liquid product to the given temperature, evaporate it at this temperature, and, finally, to superheat the vapour. This quantity is associated with the heat of vaporization. It also depends on the chemical composition and the pressure. The latter, in turn, affects the heat of vaporization. The higher the pressure, the lower is the heat of vaporization.

It follows from the definition of the enthalpy for a vapour and liquid that the heat of vaporization (or of condensation—they are equal) can be evaluated from the difference between the values of

the enthalpies for the vapour and liquid at the given temperature.

Heat of Combustion. The heat of combustion (calorific or heat value) of combustible materials is the amount of heat (in kJ) that is evolved during the complete combustion of one cubic metre of a gas or one kilogramme of liquid or solid fuel. The higher and lower heats of combustion are distinguished. The higher heat Q_h differs from the lower one Q_l by the amount of heat evolved when the water vapour formed during combustion condenses into water. Most often we have to do with Q_l because the water vapour formed in the combustion of fuel does not condense, but is carried off together with the flue gases. The heat of combustion is an important heat-engineering characteristic of heating gases, jet and furnace (industrial) fuels.

The values of the heats of combustion Q_l for selected gases (in kJ/m^3) are given below:

Hydrogen	11 083	Ethane	63 924
Methane	35 948	Propane	91 682
Acetylene	55 893	Butane	118 955

The values of the heats of combustion of liquid fuel Q_l (in kJ/kg) are as follows:

Petroleum	54 961
Aviation gasoline	44 087
Motor gasoline	43 693
Diesel fuel	43 484
Fuel oil	41 454

The relation between the heat of combustion of petroleum products, the specific gravity, and the characteristic factor is presented in Fig. 4.

Chapter 2

METHODS OF ANALYSING THE CHEMICAL COMPOSITION OF PETROLEUM AND ITS PRODUCTS

2.1. Separation of Petroleum Components

The principle underlying the analysis of the chemical composition of a petroleum consists in that by combining various methods of separating substances, the composition of the individual fractions of the initial petroleum is first gradually simplified. The chemical nature and molecular structure of the petroleum components must not change when doing this. The obtained fractions are then analysed

by chemical, chromatographic, spectral and other methods. Depending on the molecular mass and complexity of the mixtures in the separated fractions, this analysis yields either the content of individual substances (when analysing gases and light fractions up to 150 °C), or the content of individual groups of hydrocarbons or the structural elements in hybrid molecules (in the heavy petroleum fractions).

One must know the distillation range and chemical composition of a petroleum to be able to properly choose the scheme of its processing, namely, the kinds and quantities of commercial products that can be produced from it.

Diverse methods are employed to separate petroleum into more or less homogeneous groups and fractions. They include distillation, rectification, adsorption-desorption, thermal diffusion, extraction, crystallization, obtaining of solid complexes, and diffusion through membranes.

Distillation. Simple distillation cannot yield the satisfactory separation of liquids with close boiling points. This is why it is used only for the rough separation into wide fractions. Thus, in chemical group analysis, gasolines and kerosenes are divided into standard 60-95, 95-122, 122-150 °C fractions and others by distillation with a dephlegmator (partial or reflux condenser). Distillation at temperatures above 200 °C is performed in vacuum to avoid the thermal decomposition of the high-molecular hydrocarbons.

Rectification. Distillation with rectification is performed in packed laboratory rectification columns. The accuracy of separating the fractions in them depends on many factors. Of great importance are the material and shape of the packing, which should have a greatly developed surface. The latter is the site of contact between the vapour and the reflux. The better the quality of the packing, the smaller is the height equivalent to one theoretical plate (HETP). The height of the column is also related to this quantity. Of no less importance is the proper choice of the reflux-to-product ratio, i.e. the ratio of the volume of the reflux to that of the fraction produced during an identical period of time, and also the rate of distillate tapping.

The accuracy of rectification also depends on the column diameter and other design features, as well as on the observance of adiabatic conditions over the entire height of the column, i.e. on the thoroughness of the thermal insulation.

The efficiency of laboratory columns is customarily estimated by the number of theoretical plates under operating conditions (NTP). Depending on the composition of the mixtures being distilled, columns with NTP ranging from 20 to 150 and more are employed in practice.

In the laboratory rectification of multicomponent mixtures, the fractions can be withdrawn at any temperature intervals as small

as 0.5 K, and thus narrow fractions with a small number of components can be obtained.

Gas mixtures are separated by low-temperature rectification.

Molecular Distillation, or *Distillation in High Vacuum*. This kind of distillation is intended for the separation of the most high-molecular substances that decompose in conventional vacuum distillation even under a rarefaction up to 13.3 Pa. Molecular distillation is performed at a very low pressure (0.133-0.0133 Pa). Under such conditions, i.e. in almost perfect vacuum, the molecules of the initial liquid freely evaporate from the surface at temperatures below their boiling point. The mean free path of molecules up to a collision with other molecules reaches one to five centimetres in such vacuum. Consequently, if the distance between the evaporator and condenser in the distillation apparatus does not exceed this value, the consecutive removal of the condensate is possible.

High-molecular petroleum substances are divided into fractions in molecular distillation not in accordance with their boiling points, but by their molecular mass because their vapour pressure is proportional to the molecular mass. The separating ability of this fractionation method depends on the relative rates of evaporation of the molecules in the initial substance.

Adsorption. The adsorption-desorption method during the last 15-20 years in addition to rectification has become the dominating technique in the analysis of the composition of a petroleum and its separate narrow and wide fractions. The essence of the method consists in that the individual components of a mixture can be sorbed on the same or different sorbents selectively and consecutively and thus be separated from their mixture. Subsequently, during desorption, these components are separated in an unchanged state in the form of separate fractions and can be analysed separately. The desorption proceeds in the reverse sequence of adsorption. The components having the lowest adsorptivity are removed the most readily from the surface of the adsorbent. The modern adsorption techniques of analysis and separation are based on the chromatographic method proposed back in 1903 by the Russian botanist Tswett.

Chromatography. Tswett discovered that when extracts of chlorophyl are passed through an adsorbent column, coloured zones form on the adsorbent. He showed the possibility of separating mixtures of organic substances. This is why he called his method **adsorption chromatography**, i.e. the separation of substances on solid adsorbents in accordance with their colour. In our time, this method is employed to separate the most diverse mixtures, most frequently uncoloured ones, but the term "chromatography" has nevertheless been retained.

Chromatography has many varieties. **Liquid adsorption chromatography** is chiefly used for separating the components of petroleum. Here the liquid mixtures are divided into fractions in columns filled

with an adsorbent, most often silica gel. The analyte liquid is introduced into a column. The viscous products are preliminarily dissolved in pentane or another solvent. The pressure of an inert gas is used to accelerate the passage of a sample and desorbents through the column. Heat is evolved in the process of adsorption. This heat and the catalytic action of the adsorbent itself may cause the development of chemical reactions with the adsorbates such as oxidation and polymerization. To prevent this, the column should be cooled.

Two modifications of the method are distinguished according to how desorption is conducted, namely, displacement and elution chromatography.

In **displacement chromatography**, desorption is conducted by washing the adsorption column with an organic solvent whose adsorptivity is substantially higher than in any component of the analyte mixture. Examples of such displacement agents are alcohols, ketones, ethers, chloro-organic solvents, benzene, and toluene. The consecutive employment of various desorbents is possible, especially in the chromatography of high-molecular products. Since the developer (displacing agent) has a high adsorptivity, it displaces all the components of the analyte mixture from the adsorbent surface consecutively in the sequence of their decreasing adsorption energy.

In **elution chromatography**, desorption is conducted by washing the column with a large amount of a solvent having a low adsorptivity. Examples of such eluents are pentane, hexane, heptane, and petroleum ether. In washing, the adsorption layers gradually move down the column. The component adsorbed in the lower zones, i.e. having the lowest adsorption affinity to the adsorbent, will be displaced first from the column together with the solvent, and then all the remaining components. Thus, in both desorption methods, definite portions of the liquid can be tapped at the column outlet. This is done either by volume, or in definite time intervals. The properties and, consequently, the composition of the removed fractions are most often monitored by the refractive index. For the more accurate separation of the desorbed groups of hydrocarbons, fluorescent indicators are also used. They are introduced together with the sample and enable one to see the boundaries of the adsorption zones directly in the column according to the colour.

Numerous studies made it possible to establish that in adsorption on silica gel, the groups of components of petroleum and its products are adsorbed in the following sequence, beginning with the most surfactive substances: resinous substances; compounds containing sulphur, oxygen, and nitrogen; arenes beginning with polycyclic ones and ending in monocyclic ones; alkadienes, cycloalkenes, alkenes, cycloalkanes, and alkanes.

Naturally, no distinct separation of all these classes of substances from one another occurs. Most often, arenes are sorbed together with sulphur-containing compounds having the same number of rings.

Gas-adsorption and gas-liquid chromatography are popular for analytical purposes and in studying the component composition of gases and liquid petroleum mixtures.

Extraction. Fractional extraction is very helpful when studying the high-molecular fractions of petroleum. Its essence consists in that substances with a different consolute temperature are dissolved in the same solvent, for example in acetone or liquid propane, at different temperatures. Consequently, by performing fractional extraction, i.e. by removing extracts consecutively at different temperatures beginning with low ones and ending with the optimal temperature for the given solvent, a number of fractions can be obtained after distilling off the solvent. Substances with close consolute temperatures will be concentrated in each of the removed fractions. In this way, substances with a more or less identical structure can be grouped, and it will be easier to study them by other methods.

Crystallization. This technique is employed for separating substances with high melting points, i.e. solid hydrocarbons dissolved in petroleum. The best results are obtained when working with narrow fractions and with appreciable concentrations of solids. Crystallization is performed by freezing out from solutions in a suitable solvent. As far as possible, the solvent should simultaneously be a precipitant for the substances being separated by crystallization. At any rate, it must dissolve the high-melting components considerably more poorly than the low-melting ones. The use of a solvent lowers the viscosity of the product, which at low temperatures can be so high that it will impede crystallization. The solvents used include liquid propane, the chlorine derivatives of hydrocarbons, ethyl ether, a mixture of alcohol and ether, a mixture of ethyl and isoamyl alcohols, and an acetone-toluene mixture. A high purity of the solids can be achieved by repeated recrystallization from a solvent.

Fractional crystallization is employed when studying paraffin waxes and ceresines. Here fractions are removed from the same portion of solid analyte petroleum product by filtration at a gradually lowering temperature (every 10 °C). This method is used to group solid hydrocarbons with close melting points.

Formation of Complexes with Urea. Urea (carbamide) $CO(NH_2)_2$ can form solid molecular compounds with alkanes (and their derivatives) having a normal structure. When a complex forms, the urea crystallizes in the form of a hexagonal prism with an internal channel 0.5-0.6 nm in diameter. When the urea or its methanol solution

is mixed with products containing normal alkanes, the molecules of the latter owing to their small cross-sectional dimensions penetrate into these channels.

The formed crystalline compounds have been named inclusion (clathrate) complexes or adducts. The adducts of normal alkanes with urea readily decompose when treated with water, an excess of the solvent, and when heated. Hence, the urea can be regenerated, and the alkanes recovered in the pure form. This technique of normal alkane separation is widely used at present both for purposes of analysis and in the industrial dewaxing of the middle petroleum fractions.

2.2. Analysis of Light Distillates

The task of the group analysis of the light distillates is the consecutive quantitative determination of the hydrocarbons of various classes and groups. Hydrocarbons of three classes are present in the products of straight distillation or in those obtained in processes occurring under the pressure of hydrogen, namely, alkanes, cycloalkanes, and arenes. The products of cracking and pyrolysis in addition to these hydrocarbons can contain unsaturated compounds: alkenes, alkadienes, cycloalkenes, and arenes with unsaturated side chains (like styrene). In the detailed analysis of the composition of light-end petroleum fractions, its task is the quantitative determination or qualitative identification (proof of the presence) of individual hydrocarbons or heteroatomic substances in the sample being analysed.

The successful solution of this very involved task has lately been facilitated by appreciable progress in the creation of complicated and automatic apparatus for the conducting of gas-liquid chromatography and spectral methods of analysis. It is just these analytical procedures that enable one to decipher the composition of multicomponent petroleum mixtures not only of a narrow, but also of a broad fractional composition. Thus, the combining of gas-liquid chromatography and mass spectroscopy makes it possible to establish the individual composition of gasolines with a boiling range from 35 to 180 °C.

The most popular among the spectroscopic methods of studying the chemical composition of petroleum are analyses using the spectra of combination light (Raman) scattering, absorption spectra in the infrared and ultraviolet regions, mass spectroscopy, and nuclear magnetic resonance spectroscopy (NMR spectroscopy).

Raman scattering occurs when light of a definite wavelength is passed through a substance whose molecules partly absorb the electromagnetic vibrations and are thus excited themselves; next they emit these vibrations, but at a different wavelength. Conversely,

previously excited molecules can give up a part of their energy to the irradiated light. Hence, the spectrum of the scattered light in addition to the line whose frequency coincides with that of the light source also contains additional lines with a weak intensity at both sides of the central line and arranged symmetrically relative to it. The frequencies and intensities of these additional lines are characteristic of a given scattering substance. At present, detailed atlases of Raman spectra of many individual hydrocarbons are available. This enables one to use this method for identification, and sometimes also for assaying the content of hydrocarbons in the narrow fractions being studied.

Infrared Absorption Spectra. Any compound absorbs to a certain extent the infrared rays incident on it in a definite region of wavelengths. This manifests itself in the form of absorption bands in the infrared spectrum of the given compound. Depending on the complexity of the molecules, the number of absorption bands varies from two or three to several scores. The absorption bands determine the molecule as a whole, while some of them are characteristic of individual atomic groups and structural features of a molecule (for example, of the groups CH_2, CH_3, a double bond). The spectrum of mixtures is the superposition of the spectra of the individual compounds. Consequently, by studying infrared absorption spectra, one can qualitatively decipher the composition of a hydrocarbon mixture. The intensity of the bands sometimes also makes it possible to determine the quantitative composition of the mixture.

Arenes are also identified quite well by using absorption spectra in the ultraviolet region of wavelengths.

Mass spectroscopy is based on the ionization of the hydrocarbon mixture being studied by a stream of electrons in the vapour phase in high vacuum. The formed stream of ions is divided into groups in a magnetic field depending on their masses. Ionization is performed so that in addition to it the hydrocarbon molecules decompose with the formation of fragment ions. Definite relations exist between the structure of a compound and its mass spectrum, which underlie the quantitative analysis by this physical method. The formation of a definite series of fragment ions characterizes each class of hydrocarbons. The ions obtained travel along different trajectories in the magnetic field depending on their mass and charge. The ions are finally directed onto a photographic plate, and a mass spectrum is produced on it. Each hydrocarbon produces its characteristic bands on the mass spectrogram that enable it to be deciphered.

NMR spectroscopy is based on the absorption of the energy of radio-frequency radiation by a substance placed in a strong homogeneous magnetic field. The essence of this physical method of studying molecular structures is described in the relevant literature.

Determining the Content of Unsaturated Hydrocarbons. All the chemical methods of quantitative determination of the unsaturated hydrocarbons are based on combination reactions at the site of a double (or triple) bond. Halogens and their compounds, sulphuric acid, sulphur monochloride, hydrogen, mercury acetate, nitrogen oxides, and other substances capable of being quantitatively attached to unsaturated hydrocarbons are used as the reagents. The simplest and most widespread methods are those of determining the bromine or iodine numbers.

The **bromine (iodine) number** is defined to be the number of grammes of bromine (iodine) combining with 100 g of the analyte substance. This number is determined in the general form by conducting a halogenation reaction followed by titration of the halogen that has not entered into the reaction with sodium thiosulphate. Simultaneously, the amount of the halogen used in the reaction is titrated in a blank test. Thus, the difference between the results of the two tests enables one to find the amount of the halogen that entered into the reaction.

To calculate the iodine number, this amount is related to the mass of the analyte sample and multiplied by 100. Knowing the average molecular mass M of the analyte, the value of the bromine or iodine number is used to evaluate the content of unsaturated hydrocarbons X_{un} in per cent:

$$X_{un}=\frac{N_{Br}M}{160}=\frac{N_{I}M}{254} \qquad (2.1)$$

where N_{Br} and N_{I} are the bromine and iodine numbers, respectively, 160 and 254 are the molecular masses of bromine and iodine.

Processing with maleic acid anhydride is employed for the quantitative determination and separation of dienes:

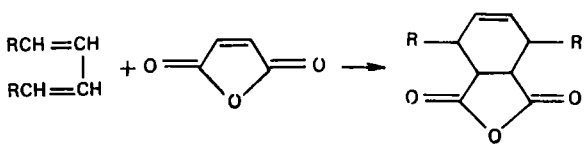

The obtained crystalline derivatives of tetrahydrophthalic acid anhydride are easily separated from the liquid hydrocarbon mixture. Cyclopentadiene and its closest homologues as well as aliphatic alkadienes with conjugated double bonds react the easiest with maleic acid anhydride.

Determination of the Arene Content. The physical constants of the aromatics differ substantially in magnitude from those of the saturated hydrocarbons. This underlies many methods used to analyse the quantitative content of arenes in the gasoline and kerosene fractions containing no unsaturated hydrocarbons.

The **aniline test**—determination of the consolute temperatures in aniline—is the most popular method.

The arenes have the lowest aniline points in comparison with saturated hydrocarbons. Therefore, the separation of arenes from a mixture raises the aniline point in proportion to their quantitative content. This makes it possible to compute the content of arenes X_{ar} in per cent (mass):

$$X_{ar} = k_{ar}(T_2 - T_1) \quad (2.2)$$

where T_1 and T_2 are the aniline points of the initial and dearomatized fractions, K (or °C), k_{ar} is a factor indicating the amount of arenes of the given fraction that corresponds to lowering of the aniline point of the mixture of saturated hydrocarbons by 1 K, %. The factor k_{ar} depends on the nature and molecular mass of the arenes and on their relative content in the mixture. This is why it is customary practice in the chemical group analysis of gasolines to preliminarily distil the gasoline into the benzene (60-95 °C), toluene (95-122 °), xylene (122-150 °C), and residual fractions.

The arenes are separated by passing the fractions through a column with silica gel. The arenes are adsorbed the easiest, and the first three millilitres of the product needed to determine the second aniline point will be completely dearomatized.

Determination of the Cycloalkane Content. After the unsaturated and aromatic compounds have been separated from a mixture, the content of cycloalkanes and alkanes can be determined in what is called the saturated residue. Their different physical constants are used for this purpose. Data on the specific gravities, aniline points, refractive indices, and specific refractions are employed with approximately equal success from the viewpoint of the accuracy of analysis. Since all these quantities obey the additivity rule for cycloalkane-alkane mixtures, it is simple to evaluate the content of cycloalkanes X_c in per cent (volume) in the saturated residue by the general formula

$$X_c = \frac{a - a_1}{a_2 - a_1} \times 100 \quad (2.3)$$

where a, a_1, and a_2 are the values of any of the constants for the mixture being studied, the alkanes and cycloalkanes of the given fraction, respectively.

When using the specific refraction, the results are obtained in per cent (mass). Examination of formula (2.3) reveals that in addition to the experimental determination of the physical constant of the mixture a, it is necessary to know a_1 and a_2 for the fraction being studied. Analysis of literature on the investigation of the chemical composition of gasoline fractions from 77 petroleums has made it possible to recommend weighted mean values of a_1 and a_2 for standard gasoline fractions (Table 3).

Table 3. **Mean Values of the Physical Constants of Alkanes and Cycloalkanes in Standard Fractions of Straight-Distillation Gasolines**

Fraction, °C	Hydrocarbons	Physical constants		
		d_4^{20}	n_D^{20}	Aniline point, °C
40-60	Alkanes	0.6575	1.3729	75.0
	Cyclopentane	0.7454	1.4065	32.6
60-95	Alkanes	0.6700	1.3800	71.3
	Cyclopentanes	0.7492	1.4106	42.5
	Cyclohexane	0.7786	1.4262	29.58
	Cycloalkanes	0.7581	1.4153	38.0
95-122	Alkanes	0.6960	1.3935	72.3
	Cyclopentanes	0.7585	1.4161	54.6
	Cyclohexanes	0.7728	1.4250	45.4
	Cycloalkanes	0.7690	1.4225	46.7
122-150	Alkanes	0.7100	1.4010	73.5
	Cyclopentanes	0.7779	1.4258	57.4
	Cyclohexanes	0.7812	1.4302	51.1
	Cycloalkanes	0.7795	1.4280	54.2
150-175	Alkanes	0.7320	1.4125	77.8
	Cyclopentanes	0.7842	1.4315	61.5
	Cyclohexanes	0.8012	1.4402	55.0
	trans-Hydrindane	0.8627	1.4636	32.2
	Cycloalkanes	0.7960	1.4370	57.0
175-200	Alkanes	0.7410	1.4173	80.6
	Cyclopentanes	0.8000	1.4374	64.4
	Cyclohexanes	0.8087	1.4459	58.0
	trans-Decalin	0.8697	1.4693	37.7
	Cycloalkanes	0.8135	1.4450	58.1

The content of cycloalkanes in the saturated residue $X_{c,1}$ [in per cent (mass)] is then converted to their content in the initial fraction X_c with account taken of the content of the unsaturated X_{un} and aromatic X_{ar} hydrocarbons [in per cent (mass)]:

$$X_c = X_{c,1} \frac{100-(X_{un}+X_{ar})}{100} \tag{2.4}$$

The method of aniline points is used most frequently in conventional laboratory practice. The aniline point T_2 determined after separation of the arenes (the aniline point of the saturated residue) is used for the calculations:

$$X_{c,1,\%(vol.)} = \frac{X_{ar}T_{alk}-T_2}{X_{ar}T_{alk}-X_{ar}} 100 \tag{2.5}$$

To convert the per cent by volume into per cent by mass, it is necessary to determine the specific gravity of the saturated residue, use the data of Table 3 for the average specific gravities of the cyclo-

alkanes, and use the following formula for calculations:

$$X_{c,\,1} = X_{c,\,1,\,\%\,(vol.)} \frac{d_c}{d_{mix}} \tag{2.6}$$

The above physical methods make it possible to assess the overall amount of cycloalkanes with cyclopentane and cyclohexane rings.

The method of **catalytic dehydrogenation** proposed by Zelinsky is very helpful for their separate determination. In the dehydrogenation of the saturated residue of gasoline and kerosene fractions on a special catalyst (palladium on activated carbon) at 300 °C, the six-membered cycloalkanes transform quantitatively into arenes with the evolution of hydrogen. This reaction has been studied in great detail and is being used successfully in the studying of Soviet petroleums. The amount of formed arenes is determined by the methods indicated above. The amount of cyclopentanes is determined from the difference between the total content of cycloalkanes and the content of only cyclohexanes. The cyclopentane content can also be established by direct analysis using physical methods after the dehydrogenation and separation of the formed arenes. In this case, the values of the relevant physical constant a_2 from Table 3 have to be taken for cyclopentanes. In detailed studies, the saturated residues are subjected to accurate rectification, and the cycloalkanes are identified in the narrow fractions by spectral methods and according to the physical constants.

Determination of the Alkane Content. The overall alkane content X_{alk} in group analysis is determined by the formula:

$$X_{alk} = 100 - (X_{un} + X_{ar} + X_c) \tag{2.7}$$

The content of solid alkanes in the fractions above 300 °C is found directly by the freezing out method.

Molecular 0.5-nm sieves are employed for the quantitative determination of the normal alkane content in gasolines. Analysis is conducted in a column provided with an electrical heater (Fig. 5). The amount of alkanes is estimated by the mass gained by the column after they have been absorbed by the molecular sieves. The adsorbent pores are freed for a following analysis (regeneration) in a stream of absolutely dry hydrogen at 375 °C during one hour. A sample in an amount of 0.2-1.5 cm^3 is introduced with a syringe into the preliminarily weighed column, after which the latter is again weighed with the sample. The alkanes are absorbed in a stream of hydrogen (one bubble per two seconds) at a temperature higher by 10-20 °C than the end boiling point of the fraction being studied. Consequently, absorption occurs in the vapour phase. The column is heated at such a rate that the time from the beginning of a test up to the reaching of the working temperature is 15-20 minutes. The column is kept at the working temperature for five minutes, and after cooling

it is weighed again. During the weighing operation, the top end of the column and the end of vapour-discharge pipe *9* should be closed with rubber caps.

If further analysis of the separated normal alkanes is required, they can be displaced from the column with steam. They are gathered in a separate trap, and their composition is then deciphered by chromatography.

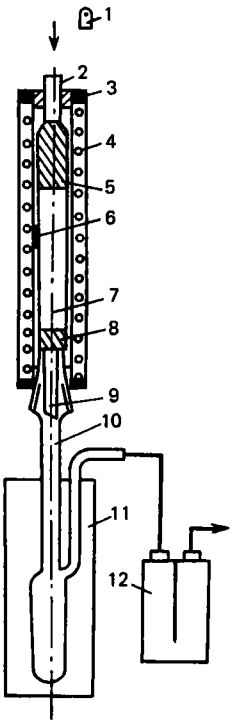

Fig. 5. Instrument for determining the alkane content in gasoline fractions: *1*—cap; *2*—column; *3*—asbestos wad; *4*—heater; *5*, *8*—nichrome packing; *6*—thermocouple; *7*—molecular sieves; *9*—vapour-discharge pipe; *10*—trap; *11*—cooling bath; *12*—Tishchenko bottle

Group Chemical Analysis of Gasoline and Kerosene Fractions. A variety of schemes for the group chemical analysis of the fractions distilled off up to 300 °C are used on the basis of the methods developed for determining the separate classes and groups of hydrocarbons. An essential preparatory operation is the separation of the starting substance into the following fractions: 60-95, 95-122, 122-150, 150-175, 175-200, 200-250, and 250-300 °C. In fractionation, the quantitative yield of the fractions in per cent is taken into consideration. All further analyses are conducted with each fraction separately.

Analysis of Fractions Containing no Unsaturated Hydrocarbons. In the simplest case, the analysis consists in the consecutive determination of arenes, cycloalkanes, and alkanes by the method of aniline points, although other physical methods can also be used for the separate determination of these classes of hydrocarbons. In all cases, it is recommended to remove the arenes for obtaining the saturated residue by filtration through a column with silica gel.

A more involved scheme of analysis provides for the separate determination of the six- and five-membered cycloalkanes, and also of normal and branched-chain alkanes.

Analysis of Fractions Containing Unsaturated Hydrocarbons. The conventional scheme of analysis provides for the determination of unsaturated hydrocarbons according to the bromine or iodine number,

and the sum of the unsaturated and aromatic hydrocarbons by the sulphuric-acid or cryoscopic method. The difference is used to find the arene content. The cycloalkanes and alkanes in the saturated residue are determined by any physical method.

In the analysis of gasoline containing unsaturated hydrocarbons to determine the individual hydrocarbon composition, it is proposed to use the following scheme combining rectification and chromatography.

1. Rectification into the fractions: IBP (initial boiling point)—100, 100-120, and 120-150 °C.

2. Liquid fluorescent chromatography of the 100-120 and 120-150 °C fractions with the separation from each fraction of the alkane-cycloalkane part, unsaturated hydrocarbons, and arenes.

Fluorescent chromatography consists in the adsorption separation of a sample on silica gel in the presence of an indicator comprising a mixture of fluorescing dyes. The latter when illuminated by ultraviolet light show the zone boundaries of the indicated hydrocarbon groups in the chromatographic column, which guarantees their more precise separation.

3. Gas-liquid chromatography in capillary columns of the IBP-100 °C fraction and of all the groups of hydrocarbons separated from the other two fractions.

By using this scheme in the analysis of gasoline produced by catalytic cracking, over 240 individual hydrocarbons were determined quantitatively. They belonged to the following structural groups: normal alkanes, isoalkanes with one and two methyl groups, five- and six-membered cycloalkanes, normal 1-alkenes, 2-alkenes, and 3-alkenes, 1-isoalkenes, 2-isoalkenes, and 3-isoalkenes with one and two methyl groups, cycloalkenes, alkadienes, and arenes (hydrocarbons of the benzene series).

2.3. Analysis of Crude Petroleums and High-Boiling Fractions

2.3.1. High-Boiling Petroleum Fractions

The chemical composition of the petroleum fractions distilled above 300 °C is very complicated. In addition to high-molecular (chiefly hybrid) hydrocarbons, the oil fractions include oxygen-, sulphur-containing, and resinous substances, as well as solid alkanes. By combining various separation techniques, one must first separate the solid alkanes and resinous substances. Further division into narrower fractions is possible by vacuum distillation, adsorption on various sorbents, and other methods. The obtained narrow fractions are then studied in detail. Their elemental composition, molecular mass, density or specific gravity, refractive index, viscosity, aniline

point, and pour point are determined. The specific refraction and the refraction intercept are evaluated. The molecular mass and elemental composition are used to derive empirical formulas for the hydrocarbon series.

It is quite often possible to establish the types of molecules and their approximate proportions in the analyte fraction on the basis of all these data, and also by comparison with the physical constants of synthesized individual hydrocarbons.

Recently, mass spectroscopy and spectroscopy in the ultraviolet region of the spectrum have also come into use for the detailed studying of the oil fractions. Such studies are very time-consuming. Group chromatographic and type analyses are somewhat simpler. When speaking of the group composition of the oil fractions, we have in view only the groups of organic substances with more or less common properties that we can separate from one another by selective adsorption on certain adsorbents.

Chromatographic Analysis of High-Boiling Fractions. Liquid adsorption chromatography is employed for analysing the high-boiling fractions. Grade ACK silica gel, active alumina and activated carbon are used as the sorbents. The alkane-cycloalkane part separates well from arenes and the latter from resinous substances on silica gel.

The arene fraction has been given this name here and below only for brevity. This group actually includes hydrocarbons having at least one arene ring. The same group naturally also includes purely aromatic hydrocarbons of the naphthalene, anthracene, and other series. Arenes with different numbers of rings are separated more accurately on alumina. The sulphur-containing compounds are mainly sorbed together with the arene fractions. The normal alkanes can be additionally separated from the alkane-cycloalkane fraction on activated carbon.

The individual groups of the oil fraction components are desorbed consecutively: (1) with a solvent like light dearomatized gasoline for washing out the alkane-cycloalkane fraction; (2) with benzene for the desorption of arenes; and (3) with an alcohol-benzene mixture or acetone for the desorption of resinous substances.

The composition of the desorbed fractions is monitored according to their refractive indices. Adsorption on different sorbents is generally conducted consecutively. Initially, the alkane-cycloalkane and total arene fractions are obtained on silica gel. Next the arenes are divided into fractions of light, medium, and heavy (mono-, di-, and tricyclic) arenes in a column with alumina. If necessary, the alkane-cycloalkane fraction is chromatographed on activated carbon for separation of the normal alkanes.

The general procedure of chromatographic analysis is as follows. A column from 2.5 to 3 m high and 10-20 mm in diameter is filled

with regenerated or fresh silica gel of Grade ACK. For complete wetting of the silica gel, the column is filled with a solvent—heptane, light gasoline (end boiling point 80 °C), or a 60-80 °C alkylate fraction, and next a solution of a sample of the analyte oil in the same solvent is introduced. The amount of the oil must never exceed 10-15% of the mass of the silica gel. The oil-to-solvent ratio is varied from 1:3 to 1:10 depending on the viscosity. When the entire oil solution flows into the column, a little silica gel is added, the cock at the outlet from the column is closed, and the solution is left standing for 16-20 h. On the next day, the recovery of the desorbed fractions is begun. First the silica gel is washed with the same solvent. The rate of elution must not exceed 2 ml/min. Hydrocarbons containing virtually no benzene rings are displaced from the column.

The alkane-cycloalkane fraction is eluted until the refractive index of the solution at the column outlet becomes equal to that of the pure solvent. After this, more fresh silica gel is added to the column and benzene is poured into it. The fractions are again eluted, and the refractive index is tested. Elution is terminated when pure benzene flows out of the column. Next the same procedure is followed to desorb the resins with acetone or an alcohol-benzene mixture. Sometimes this is done by transferring all the silica gel from the column into a Soxhlet apparatus, in which the resinous substances are extracted. The solvent is distilled off from all the separated fractions, first under atmospheric pressure in a stream of an inert gas, and at the end in vacuum, but at a temperature not exceeding 100 °C. All the separated fractions are weighed, and the refractive indices are again determined in them.

The fractions are grouped by refractive indices, and the data obtained are used to plot a chromatogram. All the fractions with a refractive index up to 1.49 are related to the alkane-cycloalkane fraction, from 1.49 to 1.51 to the monocyclic (light arenes) ones, from 1.51 to 1.53 to the bicyclic (medium arenes), and, finally, with a refractive index above 1.53, to the tricyclic (higher arenes) ones. All these fractions can then be analysed by other methods, in particular by type analysis.

The fractions are often divided into groups according to the specific dispersion δ instead of the refractive index:

$$\delta = \frac{n_F - n_C}{d} \times 10^4 \qquad (2.8)$$

where n_F and n_C are the refractive indices for the light blue and red lines of hydrogen, respectively, and d is the specific gravity. For the four fractions indicated above, portions of the desorbed components are taken with values of δ (1) up to 100; (2) from 102 to 125; (3) from 125 to 160, and (4) above 160.

Other modifications of chromatographic analysis are employed, for example in columns with a double sorbent.

Type Analysis of High-Boiling Fractions. The idea underlying type, or ring, analysis is that a diverse mixture of hybrid hydrocarbons of the analyte fraction is represented, as it were, in the form of a *single averaged molecule* whose properties are determined by the ratio of the cycloalkane and benzene rings and the alkane chains. In other words, type analysis enables one to estimate only the relative content of individual units (arene and cycloalkane rings, alkane chains), but not the number of individual groups of hydrocarbons in the fraction being studied. The content of rings and alkane chains in per cent is expressed according to the number of carbon atoms falling to the separate parts of the averaged molecule. Let us illustrate this using a hydrocarbon with a known structure as an example, namely, a molecule of 2,3-dioctyltetrahydroanthracene (its molecular mass is 406):

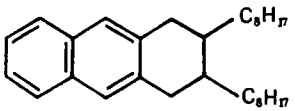

The molecule consists of two arene rings, one cycloalkane ring, and two side chains, or contains the following radicals:

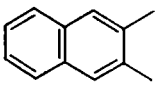

$C_{10}H_6$, mol. mass 126

C_4H_6, mol. mass 54

$-C_8H_{17}$
$-C_8H_{17}$

$2C_8H_{17}$, mol. mass 226

By dividing the number of carbon atoms in a radical by their number in the molecule, we find the fraction of carbon (in %) falling to the share of the arene C_{ar}, cycloalkane C_c, and alkane C_{alk} structures. For our example, we have

$$C_{ar} = \frac{10 \times 100}{30} = 33.3\% \quad C_c = \frac{4 \times 100}{30} = 13.3\% \quad C_{alk} = \frac{16 \times 100}{30} = 53.4\%$$

At present, the *n-d-M* method has become popular. It is based on the linear relation between the percentages of carbon in the various structures C_{ar}, C_c, and C_{alk} and the refractive index, specific gravity, and a quantity reciprocal to the molecular mass by the equation:

$$C = aM^{-1} + b\Delta d + c\Delta n \tag{2.9}$$

where M is the molecular mass, Δd is the difference between the specific gravity of the analyte fraction and a hypothetic "limit" alkane, i.e. an alkane with a chain of an infinite length and in the

liquid state, Δn is the same for the refractive index, a, b, and c are constants calculated from data obtained when studying the high-boiling (oil) fractions of various petroleums.

The following physical constants have been taken for the limit alkane: $n_D^{20} = 1.4750$, $n_D^{70} = 1.4600$, $d^{20} = 0.8510$, and $d^{70} = 0.8280$.

For the number of rings R_{ar}, R_c, and their total number R_{tot}, a similar equation has been derived:

$$R = a' + b'M\Delta d + c'M\Delta n \tag{2.10}$$

where a', b', and c' are constants whose numerical values differ from those of a, b, and c.

Formulas for calculating the results of analysis were compiled on the basis of numerous calculations. Since it is difficult to determine the physical constants for viscous oils at 20 °C, all the formulas have been duplicated for the constants determined at 70 °C. Moreover, it was found that depending on the values of C_{ar}, R_{ar}, and other quantities, two series of formulas have to be used for a low and high content of a structural element.

To simplify the calculations, first the auxiliary factors V and W are evaluated, and then the formulas given below are used for the *n-d-M* method at 20 °C.

First V and W are found:

$$V = 2.51\,(n_D^{20} - 1.4750) - (d - 0.8510) \tag{2.11}$$

$$W = (d - 0.8510) - 1.11\,(n_D^{20} - 1.4750) \tag{2.12}$$

Next the following quantities are calculated consecutively: C_{ar}—the percentage of the carbon falling to the share of the aromatic rings of the averaged molecule:

$$\left.\begin{array}{ll} \text{at } V > 0 & C_{ar} = 430V + 3660M^{-1} \\ \text{at } V < 0 & C_{ar} = 670V + 3650M^{-1} \end{array}\right\} \tag{2.13}$$

C_{cond}—the percentage of the carbon falling to the share of the condensed rings:

$$\left.\begin{array}{ll} \text{at } W > 0 & C_{cond} = 820W - 3S + 10\,600M^{-1} \\ \text{at } W < 0 & C_{cond} = 1440W - 3S + 10\,600M^{-1} \end{array}\right\} \tag{2.14}$$

(here S is the sulphur content in the fraction being studied).

C_c—the percentage of the carbon falling to the share of the cycloalkane rings:

$$C_c = C_{cond} - C_{ar} \tag{2.15}$$

C_{alk}—the percentage of the carbon falling to the share of the alkane radicals in the averaged molecule:

$$C_{alk} = 100 - C_{cond} \tag{2.16}$$

R_{ar}—the number of arene rings:

$$\left.\begin{array}{ll}\text{at } V>0 & R_{ar}=0.44+0.055MV\\ \text{at } V<0 & R_{ar}=0.44+0.080MV\end{array}\right\} \quad (2.17)$$

R_{tot}—the total number of rings in a molecule:

$$\left.\begin{array}{ll}\text{at } W>0 & R_{tot}=1.33+0.146M\,(W-0.005)\\ \text{at } W<0 & R_{tot}=1.33+0.180M\,(W-0.005)\end{array}\right\} \quad (2.18)$$

R_c—the number of cycloalkane rings:

$$R_c=R_{tot}-R_{ar} \quad (2.19)$$

Hence, for conducting an analysis, it is necessary to determine experimentally the molecular mass, specific gravity, and refractive index and perform all the calculations, or use nomograms. The *n-d-M* method is not recommended for fractions rich in aromatic components, and also containing over 2% of sulphur and over 0.5% of oxygen.

2.3.2. Crude Petroleums

A single broad unified programme is used in the Soviet Union to study the composition and properties of the petroleums of all the exploited fields and those being introduced into service. The programme provides for the conducting of the following determinations, analytical operations, and detailed studies:

(1) separation of dissolved gases and low-boiling hydrocarbons (up to C_5) and their analysis by chromatography;

(2) determination of the physicochemical indices in accordance with the existing standards (specific gravity, viscosity, flash point, pour point, carbon residue, acidity, ash content, and molecular mass);

(3) determination of the quantitative content of paraffin wax, sulphur, neutral resins, asphaltenes, petroleum acids, and phenols;

(4) determination of the ash content;

(5) distillation of the petroleum in a standard apparatus as stipulated by the State standards;

(6) distillation of the petroleum in a Model APH-2 apparatus provided with a rectification column having an efficiency of 22 theoretical plates;

(7) one-fold evaporation of the petroleum at various temperatures;

(8) group analysis of the gasoline fraction by the aniline method;

(9) determination of the hydrocarbon composition of the gasoline fraction by gas-liquid chromatography;

(10) determination of the normal alkane content in the gasoline fraction with the aid of molecular sieves;

(11) determination of the content of individual arenes of the composition C_8 by ultraviolet spectroscopy;

(12) analysis of the fractions boiling out above 200 °C by liquid adsorption chromatography;

(13) structural-group analysis of 50-degree kerosene-gas oil and lubricating oil fractions by the *n-d-M* method;

(14) determination of the potential content of the basic distillate and residual oils;

(15) detailed studies of the kerosene-gas oil and lubricating oil fractions, as well as separate groups of hydrocarbons and their mixtures recovered in the adsorption separation of the distillate and residual fractions.

Chapter 3

CLASSIFICATION OF PETROLEUMS AND THEIR PRODUCTS. COMPOSITION AND SERVICE PROPERTIES OF PETROLEUM PRODUCTS

3.1. Classification

3.1.1. Petroleums

The petroleums of various fields differ from one another in their physical (specific gravity, viscosity) and chemical (content of sulphur, resins, paraffin wax, group composition) properties. The properties of a petroleum determine how it is to be processed, and have a decisive influence on the quality of the products obtained from it. This is why it is important to classify petroleums depending on their chemical nature and properties.

There are various chemical, genetic, industrial, and commercial classifications of petroleums. A technological classification is employed in the USSR. Its main features are given in Table 4. Petroleums are divided into classes (according to their sulphur content),

Table 4. **Technological Classification of Petroleums (according to USSR Standard OST 38.01197-80)**

Class	Sulphur content, %				Type	Yield of fractions up to 350 °C, %
	in petroleum	in gasoline (up to 180 °C)	in jet fuel 120-240 °C	in diesel fuel 240-350 °C		
1	⩽0.50	⩽0.10	⩽0.10	⩽0.20	1	⩾55.0
2	0.51-2.0	⩽0.10	⩽0.25	⩽1.00	2	45.0-54.9
3	>2.0	>0.10	>0.25	>1.00	3	<45.0

concluded

Group	Potential content of base oils, %		Subgroup	Viscosity index of base oils	Kind	Content of paraffin wax in petroleum, %
	in petroleum	in fuel oil (above 350 °C)				
1	≥25.0	≥45.0	1	>95	1	≤1.50
2	15-24.9	≥45.0	2	90-95		
3	15-24.9	30-44.9	3	85-89.9	2	1.51-6.00
4	<15.0	<30.0	4	<85	3	>6.00

Note. Dewaxing is not required: for class 1 petroleum when producing jet and diesel fuels and distillate base oils; for class 2 petroleum when producing jet and diesel summer fuels.

Dewaxing is required: for class 2 petroleum when producing distillate base oils and diesel winter fuel; for class 3 petroleum when producing diesel and jet fuels and distillate base oils.

types (by the content of fractions boiling out up to 350 °C), groups (by their total content of base oils), subgroups (by the viscosity index of the base oil), and kinds (by the content of solid alkanes—paraffin waxes).

Petroleum of class 1 (low-sulphur or sweet) contains not over 0.5% of sulphur, of class 2 (sulphur-bearing)—from 0.51 to 2.0%, and of class 3 (high-sulphur or sour)—over 2.0%.

Petroleum of type 1 contains at least 55% of fractions boiling out up to 350 °C, type 2 petroleum from 45.0 to 54.9%, and type 3—less than 45%.

Petroleum of kind 1 (low-paraffinic) contains not over 1.5% of paraffin wax with a melting point of 50 °C. Such petroleum without dewaxing can be used to produce fuels for jet engines with an initial freezing (crystallization) point not higher than —55 °C, diesel fuels, and industrial base oils. Paraffinic petroleums of kind 2 contain from 1.51 to 6.0% of paraffin wax. Jet and summer diesel fuels can be produced from such petroleums without dewaxing. Petroleum of kind 3 is called high-paraffinic and contains over 6% of paraffin wax.

By using this classification, we can compile a cipher for any commercial petroleum. These ciphers of the technological classification for some Soviet petroleums are: 2.2.3.3.2 for Tuimazy petroleum, 2.2.3.2.3 for Usinsk, 1.3.3.1.3 for Uzensk, and 2.1.3.1.2 for Samotlor petroleum.

3.1.2. Products

The processing of petroleum yields over 600 various products. They can be divided into the following main groups differing in their composition, properties, and fields of application: I—liquid fuels, II—petroleum lubricating and similar oils, III—greases, IV—

paraffin waxes and ceresines, V—asphalts, VI—technical carbon (carbon black), VII—petroleum coke, VIII—additives to fuels and oils, IX—aromatics, X—miscellaneous petroleum products for various purposes.

I. Liquid Fuels. This group includes (1) fuels for aircraft and motor vehicle engines (gasolines); (2) jet fuels; (3) diesel fuels; (4) turbine fuels; (5) stove fuels; (6) fuel oils; and (7) liquefied household fuel gases.

Aviation gasolines are a mixture of gasoline fractions produced by straight distillation, catalytic cracking and reforming, alkylate, and other components with the addition of antiknock and antioxidant (antiacid) additives. The following grades are produced in the USSR: Б-95/130, Б-91/115, and Б-70. The number in the numerator is the octane number, and in the denominator is the quality grade when using a rich mixture.

Motor gasolines are mixtures of the gasoline fractions of straight distillation, thermal and catalytic cracking, catalytic reforming, alkylate, isomerisate, benzene and toluene extraction raffinates. Their grades are A-72, A-76, АИ-93, and АИ-98. For the first two gasolines, the numbers indicate the octane number determined by the motor method, and for the others, by the research method. The gasoline A-72 is produced without antiknock additives, and the other grades either with or without such additives. The additives are introduced on the basis of 0.24-0.50 g of lead per kilogramme of gasoline.

Fuel for aviation air-jet engines (jet fuels, aviation kerosenes) are mainly produced by the straight distillation of petroleum. Fuels are released for aircraft flying at subsonic speeds (T-1, TC-1, PT, T-2) and for craft flying at supersonic speeds. The various grades of fuel differ in their fractional composition, and the overall and mercaptan sulphur content. The freezing point for most jet fuels must not be higher than —60 °C.

Diesel fuel is intended for use in compression-ignition engines and is produced from gas oil fractions of straight distillation and secondary refining processes. Two sorts of diesel fuel are produced:

(1) fuel for high-speed diesel and gas-turbine engines installed in land and marine equipment (Grades Л—summer, З—winter, A—arctic); these grades differ in the pour point and the sulphur content;

(2) fuel for moderate- and low-speed diesel engines (Grades ДТ and ДМ); the grades differ in the viscosity and pour point.

Gas-turbine fuels are used in the gas turbines installed on river and ocean vessels, stationary and mobile power plants. They are produced from the distillates of coking, thermal cracking, and straight distillation. In gas-turbine fuels, the viscosity at 50 °C (not over 3 °E), the ash content (not over 0.01 %), the flash point, and the content of vanadium, sodium, potassium, and calcium are rated.

Stove fuels are intended for burning in special domestic stoves. They are prepared from the distillate fractions of the straight distillation of petroleum and secondary processes. Their fractional composition, viscosity, ash content, flash point (not below 42 °C) and pour point (not above 15 °C) are rated.

Fuel oils consist of the products of the straight distillation of petroleum, the gas oil and residual fractions obtained in secondary petroleum refining processes, and residues from the processing of lubricating oils (extracts, asphalts). Three grades of furnace fuel oils are produced—marine fuel oils (Ф-5, Ф-12), furnace fuel oils (Grades 40 and 100), and fuel oils for open-hearth furnaces (МП and МПС). They differ in their viscosity (from 5 °E at 40 °C to 16 °E at 80 °C), pour point (from —5 °C to 25 °C), and flash point.

Liquefied household fuel gases are produced on the basis of the stabilizer overhead obtained in primary distillation, catalytic reforming, and catalytic cracking. There are three grades differing in their propane and butane content: СПБТЗ—a technical winter mixture of propane and butane, СПБТЛ—a summer mixture of propane and butane, and ТБ—technical butane. In these products, the mass fraction of mercaptan sulphur and hydrogen sulphide (not over 0.015%), the saturated vapour pressure, and the content of light (methane and ethane) components are rated.

II. Petroleum Oils. This second basic group includes liquid distillate and residual products of various viscosities and degrees of purification intended for providing liquid lubrication in various machines and mechanisms, and also having diverse technical applications in many branches of industry. Petroleum oils are classified by how they are separated from petroleum (distillate, residual, mixed), by how they are purified (leached, acid-alkaline treatment, selective purification, etc.), and by their fields of application (lubricating and special).

Lubricating oils are divided into industrial, turbine, compressor, transmission, instrument, and motor oils.

Industrial oils are intended for lubricating machine tools, mechanisms and machinery operating under a variety of conditions and at various speeds and loads. They are divided by the value of their viscosity into light (ν_{50} = 4-8.5 mm²/s), middle (ν_{50} = 12-50 mm²/s), and heavy (ν_{100} = 9-36 mm²/s) oils.

Over 40 grades of industrial oils are produced in the USSR for various machines and mechanisms. They include general-purpose oils of series И (grades according to their viscosity at 50 °C—И-5А, И-8А, И-12А, И-20А, etc.), oils of series ИГП for lubricating machine tools (12 grades with a viscosity at 50 °C ranging from 3.4 to 190 mm²/s), oils of series ИСП for geared transmissions, oils for lubricating rolling mills, vacuum oils employed as the working fluids of vacuum pumps, separator oils Л and Т, and many others.

Oils for Turbines, Compressors, and Steam Engines. This subgroup includes oils operating under severe loading conditions, at an elevated temperature, and under the action of water, steam, and air.

Turbine oils are intended for lubricating and cooling the bearings of steam and water turbines and for filling the control systems of steam turbogenerators. They should resist oxidation and have a high rate of demulsification (eight minutes). The following grades are produced: T_{22}, T_{30}, T_{46}, T_{57}, Тп-22, Тп-46 (the numbers signify the viscosity at 50 °C in mm^2/s, and the letter "п"—additive).

Compressor oils are intended for lubricating the cylinders, valves, and other mating parts of air compressors and blowers. They are highly viscous residual oils that are resistant to oxidation (Grades K-12, K-19, where the numbers indicate the viscosity at 100 °C in mm^2/s).

Oils for steam engines (cylinder) are employed for lubricating the cylinders of steam engines operating on saturated or superheated steam. Grade 11 and 24 cylinder oils with a viscosity of 11 and 24 mm^2/s (at 100 °C), respectively, are intended for machines using saturated steam, and the heavy Grade 38 and 52 cylinder oils are for machines using superheated steam.

Transmission and axle oils are intended for lubricating the transmissions of motor vehicles, for geared and hypoid transmissions, steering gears, and for various rough mechanisms. Transmission oils are marketed without additives, or with antiwear and score-preventive additives. Unpurified oil distillates with a high viscosity are used as axle oils. Summer, winter, and Arctic grades are available with a pour point from —15 to —55 °C.

Instrument oils are used to lubricate testing instruments (МВП oil), tabulating machines (ПАРФ-1), watch and clock mechanisms, telegraph apparatus, high-precision instruments, and micromachines (oils of series МП).

The subgroup of *motor lubricating oils* includes oils for carburettor, motor vehicle, diesel, and aviation engines. Motor oils are generally prepared by mixing the base oils of selective refining with various additives. In 1972, a new classification of motor lubricating oils (except aviation oils) was introduced in the USSR. It is based on their viscosity and service properties (Table 5). In the oil designation, the letter M stands for motor oil, the numbers 6, 8, and so on—the viscosity at 100 °C in mm^2/s, the letters А, Б, В, Г, Д, and Е—the group with respect to the service properties. The group and subgroup corresponds to a definite type of engine for which the oils are intended.

The following groups and subgroups of motor lubricating oils exist:

А —unboosted carburettor and diesel engines;
$Б_1$—carburettor engines with low boosting;
$Б_2$—diesel engines with low boosting;

$В_1$ —carburettor engines with moderate boosting;
$В_2$ —diesel engines with moderate boosting;
$Г_1$ —carburettor engines with high boosting;
$Г_2$ —diesel engines with high boosting;
Д —highly boosted diesel engines operating under severe conditions;
Е —low-speed diesel engines with a lubricator system of lubrication operating on heavy fuel with a sulphur content up to 3.5%.

The letters П and И are also encountered in the designations of oils. They indicate that the oil contains a home-made (П) or imported (И) additive. The letters Л, З, and С signify summer, winter, and Arctic oil, respectively.

Aviation oils for reciprocating engines are highly viscous residual oils with good purification. Grades МС-14, МС-20, and МК-22 are available (the numbers indicate the viscosity at 100 °C).

Aviation oils for turbojet engines are produced from high-grade petroleums or on the basis of synthetic components (esters) with the introduction of various additives. The marketed grades include МС-6, МС-8, МК-8, МК-6, ВНИИНП-50-1-4ф, 36/1, and ИПМ-10.

Blends consisting of Grade МК-8 and МС-20 oils taken in various proportions, and also Grade МН-7.5 and ВНИИНП-7 oils are employed for turboprop engines.

Oils for carburettor motor vehicle engines are produced from distillate or mixed-base oils with selective purification. The most widespread are oils of Grades М-6Б (АС-6), М-8Б (АС-8), М-10Б (АС-10), where the numbers indicated the viscosity at 100 °C, oils for boosted engines М-8$В_1$, М-8$Г_1$, and М-12$Г_1$. Oils of Grades М-12ГИ (summer), М-8ГИ (winter), and М-10ГИ (all-weather) are used for the engines of VAZ (Lada) automobiles.

Over 50 grades of various lubricating oils are produced in the USSR for diesel engines. Depending on the conditions of their service, the main quality indices of these oils (viscosity, viscosity index, pour point, motor properties) vary within broad limits. For example,

Table 5. **Classification of**

Viscosity class	Viscosity limits, mm²/s, at 100 °C	Classification by ser		
		А	Б	
			$Б_1$	$Б_2$
6	6±0.5	—	М-6$Б_1$	—
8	8±0.5	М-8А	М-8$Б_1$	М-8$Б_2$
10	10±1	М-10А	М-10$Б_1$	М-10$Б_2$
12	12±0.5	—	—	М-12$Б_2$
14	14±1	—	—	М-14$Б_2$
16	16±1	—	—	М-16$Б_2$
20	20±2	—	—	М-20$Б_2$

the viscosity ranges from 8 to 20 mm^2/s at 100 °C, the viscosity index from 45 to 140, and the pour point from 0 to —43 °C.

The group of *special* (*non-lubricating*) *oils* includes oils intended not for lubrication, but for use as the working fluids in brake systems, in steam-jet pumps and hydraulic devices, and also in transformers, capacitors, and oil-filled electrical cables as an electrical insulating material. It also includes medical, perfumery, absorption, and some other special oils. All these oils must meet requirements of a high purity, and certain special indices are monitored for them depending on the conditions of their use. The names of these oils reflect the sphere of their application, for example, transformer oils (ТКп, ТК), vaseline, medical, capacitor, and perfumery oils.

III. Greases. These are pasty petroleum products intended for the lubrication of closed and generally heavily loaded mechanisms and for the protection of various articles from the action of the environment. Some grades are also employed for sealing (packing) various systems. Greases are produced on the basis of petroleum oils thickened with soaps, solid hydrocarbons, and other thickeners. Greases are classified by their consistence (semiliquid, plastic, and solid), by the type of thickener used (hydrocarbon, soap, inorganic, and organic), and by their field of application (antifriction, protective, and packing). The most widespread are antifriction greases—synthetic solid oil, fatty solid oil (universal medium-melting grease УС), and the greases ВНИИНП-274, ВНИИНП-232, and ВНИИНП-263.

IV. Paraffin Waxes and Ceresines. This group includes liquid paraffin waxes, solid petroleum paraffin waxes, solid food paraffin waxes, and ceresines.

The liquid waxes produced in the carbamide and adsorption dewaxing of the diesel fractions are a raw material for the production of protein and vitamin concentrates, synthetic fatty acids, and surfactants.

Motor Lubricating Oils

vice properties

В		Г		Д	Е
$В_1$	$В_2$	$Г_1$	$Г_2$		
М-6$В_1$	—	М-6$Г_1$	—	—	—
М-8$В_1$	М-8$В_2$	М-8$Г_1$	М-8$Г_2$	М-8Д	—
М-10$В_1$	М-10$В_2$	М-10$Г_1$	М-10$Г_2$	М-10Д	—
—	М-12$В_2$	М-12$Г_1$	М-12$Г_2$	М-12Д	М-12Е
—	М-14$В_2$	—	М-14$Г_2$	М-14Д	М-14Е
—	М-16$В_2$	—	М-16$Г_2$	М-16Д	М-16Е
—	М-20$В_2$	—	М-20$Г_2$	М-20Д	М-20Е

Solid waxes are separated from the oil distillate fractions. Commercial solid waxes are subdivided into the following sorts: highly refined wax (grades according to the melting point $B_1$50-52, $B_2$52-54, $B_3$54-56, and $B_4$56-58), technical refined wax (T), wax for synthesis (C), unrefined match wax (H_c), unrefined high-melting wax (H_B). Wax for the food industry (П-1, П-2, П-3) is produced by high purification. It is distinguished by the complete absence of benzpyrene, acids, alkalies, sulphates, chlorides, water, and mechanical impurities.

Different grades of ceresine are also available (80, 75, 67, 100, capacitor).

V. Asphalts. Asphalts are produced from heavy petroleum residues by the methods of high concentration (residual) or oxidation (oxidized) and are intended for road building, the production of roofing materials, dampproof courses, electrical insulation, the preparation of asphalt lacquers and printing inks.

Petroleum asphalts are marketed in the liquid, semisolid, and solid forms. The numerous grades of asphalts differ from one another in their softening point, penetration, and ductility. By their designation, asphalts are divided into road (viscous and liquid), building, roofing, insulation, high-melting (mineral rubbers), and special asphalts.

VI. Technical Carbon (Carbon Black). This product is a finely dispersed loose black powder with particles 30-40 μm in diameter. It is prepared at special enterprises from pyrolysis resins, gas oils of catalytic and thermal cracking, and natural gas. According to the method of production, channel and furnace blacks are distinguished. It is employed as a filler in the rubber, paint and varnish industries and as a pigment in the preparation of printing inks and ebonite.

VII. Petroleum Coke. This is a porous solid mass prepared by coking heavy residues in stills and unheated chambers. It is used in the production of anode compounds for the melting of aluminium and of graphitized electrodes. Several grades of coke are available differing in the kind of starting material used in coking and in the sulphur and ash content (КНКЭ, КНКЮ, КНПС, КН, КЗ).

VIII. Aromatics. The commercial aromatics (benzene, toluene, xylene isomers, ethylbenzene) are produced in catalytic reforming and pyrolysis plants and are employed in the production of plastics, rubber, synthetic resins, and fibres.

IX. Additives to Fuels and Oils. By additives are meant substances added in small amounts to fuels, lubricating and other oils to appreciably improve their service properties. They are produced by multiple-stage synthesis from various organic compounds.

X. Miscellaneous Products. This group includes:

lubricating and cooling petroleum products (emulsion oils, pastes, lubricating and cooling liquids) employed in the processing of

metals, for degreasing metallic components, and other technical needs;

petroleum acids and their salts mainly used in soap boiling and for various technical purposes;

synthetic fatty acids—the products of paraffin wax oxidation;

petroleum sulphoacids (Petrov's contact), various mastics, demulsifiers of petroleum emulsions;

burning kerosenes whose main quality index is the height of the non-smoking flame;

industrial naphthas and solvents used in the rubber, paint, and varnish industries, and in the extraction of oil and fat from seeds, bones, and leaves.

3.2. Carburettor Fuels

Modern machines make widespread use of reciprocating spark-ignition engines. The combustible mixture of fuel and air is generally prepared in these engines by a special device—a carburettor, and this is why the fuel for such engines is called carburettor fuel.

There are four-stroke and two-stroke engines differing in the way of filling a cylinder with a fresh charge of fuel. Four-stroke engines are used in aircraft and motor vehicles, and two-stroke ones for motorcycles and motor scooters. The working cycle of a four-stroke engine is completed during four strokes of a piston. During the first stroke (intake), the combustible mixture consisting of fuel and air is admitted from the carburettor into a cylinder via the intake valve and fills the cylinder. During the second stroke (compression), the intake and exhaust valves are closed and the mixture is compressed by the piston to 0.8-2.0 MPa. The temperature rises to 200-400 °C. At the end of compression, with a certain advance, the mixture is ignited by an electric spark. Although the duration of burning of the fuel is very short—thousandths of a second, the fuel nevertheless burns gradually, as the flame front moves along the combustion chamber. By the flame front is meant the thin layer of gas in which the combustion reaction occurs. In normal combustion, the flame front propagates at a speed of 20-30 m/s. The pressure of the gases during combustion smoothly grows to 3-6 MPa, and the temperature rises to 1600-2200 °C.

During the third stroke (working, or expansion), the energy of the compressed combustion products is converted into work, while during the fourth stroke (exhaust), the engine cylinder is scavenged of the combustion products via the exhaust valve.

Gasolines are used as the fuel for reciprocating spark-ignition engines. The main service indices of motor gasolines are their anti-knock properties, fractional composition, chemical stability, and anticorrosive properties. To assess the quality of aviation gasolines,

in addition, such indices as the freezing point, the content of gummy materials, and the heat of combustion are employed.

Detonation or **knock** is the name given to an abnormal nature of the combustion of fuel in an engine, when only a part of the working mixture after ignition by a spark burns normally at the usual rate. The last portion of the fuel charge (up to 15-20%) that is ahead of the flame front instantaneously self-ignites. As a result, the speed of flame propagation increases to 1500-2500 m/s, and the pressure increases in sharp jumps instead of smoothly. This sharp pressure increase creates a shock detonation wave. The impact of this wave against the walls of the cylinder and its multifold reflection from them leads to vibration and produces a characteristic metallic knock that is the main external feature of detonation combustion. Other external features are the appearance of puffs of black smoke in the exhaust gases, and also a sharp increase in the temperature of the cylinder walls. Knock is a very harmful phenomenon. In knock regimes, the engine power drops, the specific fuel consumption grows, and the operation of the engine becomes rigid and rough. Moreover, knock causes burning out and warping of the pistons and exhaust valves, overheating and failure of the spark plugs, and other faults. Wear of the engine is accelerated, and the time between repairs decreases. Accidents may occur in continuous operation in the regime of intensive knock. The latter is especially dangerous in aircraft engines.

Knock is explained from the chemical viewpoint by supersaturation of the last portion of the fuel charge by primary products of hydrocarbon oxidation—hydroperoxides and their decomposition products—highly active free radicals, which react at the speed of an explosion when a definite concentration is reached. As a result, all the unburned part of the fuel mixture instantaneously self-ignites. The higher the rate of peroxide formation in a given working mixture, the quicker does explosive combustion occur, the earlier does the normal propagation of the flame front change over to detonation propagation, and the greater will the consequences of knock be. It thus follows that the fundamental factor on which the appearance and intensity of knock depend is the chemical composition of the fuel because it is general knowledge that the tendency of oxidation for hydrocarbons of various structure under comparable conditions sharply differs.

If a fuel mainly contains hydrocarbons that do not form a considerable amount of peroxides under the preflame oxidation conditions, no explosive decomposition will occur, the mixture will not become supersaturated with active particles, and combustion will proceed at the usual rates, without knock.

The knock resistance or antiknock properties of hydrocarbons and fuels are assessed on stationary single-cylinder engines. All the

methods of assessing these properties are based on the principle of comparing the test fuel with mixtures of standard fuels. Isooctane (2,2,4-trimethylpentane) and heptane have been selected as the standard fuels, and the octane number has been adopted as a measure of the antiknock properties.

Pure isooctane is practically free from knock, while pure heptane knocks worse than almost any known fuel. Mixtures of these two substances can be made to match the knock property of any fuel. Such a mixture is designated by the percentage (by volume) of isooctane in it, and this is exactly what has been named the **octane number.**

The octane number of isooctane has been taken equal to 100, and that of heptane equal to 0. Hence, if the gasoline being tested has been found equivalent under the standard conditions of the test to a mixture consisting, for example, of 70% of isooctane and 30% of heptane, its octane number is 70. The octane number is a rated index of the antiknock property of motor vehicle gasolines, and also of aviation gasolines when operating with lean mixtures and without the use of supercharging.

The knock resistance of aviation gasolines in engines operating with rich mixtures and with the use of supercharging is shown by their knock rating.

The **knock rating** of fuel in a rich mixture is a characteristic showing the power of an engine (in %) when using the test fuel in comparison with the power obtained when using standard isooctane whose knock rating is taken equal to 100.

The octane numbers are determined in special test arrangements under strictly standard conditions. Two standard methods are used to test motor vehicle gasolines—the motor and the research methods. The conditions of the tests in the motor method are more rigorous (a speed of 900 rpm, a working mixture temperature of 149 °C after the carburettor). It is therefore more suitable for assessing the antiknock properties of fuels intended for engines with a low compression ratio.

The testing conditions in the research method are milder (a speed of 600 rpm, and the working mixture is not heated before the carburettor). This method is used to assess high-octane components and fuels intended for highly boosted valve-in-head engines. The octane numbers determined by the research method are always somewhat higher than those found by the motor method. This difference is known as the **fuel sensitivity.** Catalytic cracking and catalytic reforming gasolines are the most sensitive to the testing conditions. The difference in the octane numbers may reach 5-10 units depending on the content of aromatics in the gasoline. Hence, when data are given on octane numbers, the test method used to determine them must always be indicated.

One way of improving the antiknock property of fuels for spark-ignition engines is the use of antiknock agents. These are substances added to gasolines in an amount not exceeding 0.5% to substantially improve their antiknock properties.

Tetraethyl lead (TEL) $Pb(C_2H_5)_4$ is a quite efficient antiknock agent used in all countries. Already at 200-250 °C, TEL readily decomposes into lead and free ethyl radicals whose presence in the fuel-air mixture retards the formation of peroxides in the preflame period.

TEL cannot be used in the pure form because lead and lead oxide would accumulate on the valves, spark plugs, and cylinder walls and disrupt operation of the engine. This lead deposit is prevented by adding lead removers to the TEL. The lead removers include dibromoethane, ethyl bromide, 1-monochloronaphthalene, and dibromopropane. The mixture of TEL, lead removers, and a pigment is called **ethyl fluid.**

Tetraethyl lead and, consequently, ethyl fluid are very poisonous. Special safety rules must be observed when handling them and the ethyl gasolines containing them. To distinguish ethyl gasolines, they are coloured. In the USSR, Grade A-76 gasoline is coloured yellow, АИ-93 orange-red, and АИ-98 blue.

Gasolines of various chemical composition have a different response to the addition of TEL. The **response to TEL** is assessed by the number of units by which the octane number of the given fuel or hydrocarbon increases when a definite amount of TEL is added in comparison with the octane number of the same substance in the pure state, i.e. without the antiknock agent. Normal alkanes have the highest response to TEL, and arenes, the lowest.

The use of ethyl gasolines leads to contamination of the atmosphere by harmful exhausts containing carbon monoxide and lead compounds. Consequently, restrictions are being imposed on the use of this kind of fuel everywhere, and primarily in large cities. To improve the antiknock property of non-ethyl gasolines, lately the addition of high-octane non-hydrocarbon components to them has been begun.

One of these components is methyl-*tert*-butyl ether. It is practically insoluble in water, but mixes with gasoline in any proportions and has a very high octane number, namely, 98 by the motor and 115 by the research method.

Methyl-*tert*-butyl ether is produced from methanol and isobutylene by the reaction

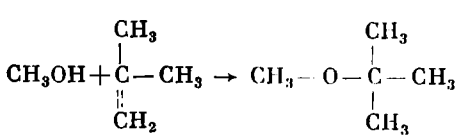

The studying of the antiknock property of individual hydrocarbons made it possible to establish how this important property depends on the chemical structure of the hydrocarbons and was of a major significance for the selection and creation of various quality grades of fuel for diverse engines.

The following brief conclusions on the antiknock property of individual groups of hydrocarbons contained in gasolines can be made.

Normal Alkanes. Beginning from pentane, the hydrocarbons of this series are characterized by very low octane numbers, which diminishes with a growth in their molecular mass. The antiknock property is almost inversely proportional to the molecular mass.

Branched-Chain Alkanes. Branching of the alkane molecules sharply improves their resistance to knock. For example, the octane number of octane is 20, while that of 2,2,4-trimethylpentane is 100. The highest octane numbers are noted in isomers with paired methyl groups at the same carbon atom (neohexane, triptane, standard isooctane), and also in the other trimethyl isomers of octane.

Owing to their high antiknock properties, isoalkanes with from five to eight carbon atoms are very desirable components of gasolines.

Alkenes. The appearance of a double bond in a molecule of a normal hydrocarbon causes a substantial improvement in the antiknock property in comparison with the relevant saturated hydrocarbons.

Cycloalkanes. The first representatives of the cyclopentane and cyclohexane series have a good antiknock property. This is especially true of cyclopentane. Their response to TEL is also quite high. These hydrocarbons are valuable constituents of gasolines. The presence of side chains with a normal structure in the molecules of both cyclopentanes and cyclohexanes decreases their octane number in proportion to the length of the chain. Branching of the side chains and an increase in their number improves the antiknock property of cycloalkanes.

Arenes. Almost all the simplest arenes of the benzene series have octane numbers of about 100 and higher. Arenes and aromatized gasolines in addition to branched-chain alkanes are the best components of high-grade gasolines. But the content of arenes in them should be limited to about 40-50%. Excessive aromatization of a fuel raises its overall combustion temperature, which involves an increase in the thermal stress of an engine and can also cause hothead ignition—spontaneous ignition of the working mixture by glowing particles of carbon deposit. This is a very harmful phenomenon that may damage the engine.

Distillation Range. The distillation range of the fuel affects the conditions of starting, the duration of warming up, and the wear

resistance of an engine, as well as the completeness of fuel combustion. The initial and end boiling points are rated, and also the 10%, 50%, and 90% points of a gasoline. The 10% point characterizes the starting properties of a fuel, the 50% or middle boiling point—the rapidity of engine warming up and the quality of air-fuel mixture formation in the warmed up engine, while the 90% and end boiling points characterize the completeness of gasoline evaporation. When it contains heavy fractions, the gasoline does not have time to evaporate in the engine intake pipe and enters a cylinder in the liquid form.

An important index of gasoline quality is the vapour pressure. It must be high enough to ensure starting of an engine at low temperatures and at the same time not too high to prevent the formation of a vapour lock in the fuel-feed system. The vapour pressure must not exceed 0.048 MPa for aviation gasolines, 0.067 MPa for summer grades, and 0.093 MPa for winter grades of motor vehicle gasolines.

Chemical Stability. In the storage, transportation, and use of gasolines, changes in their chemical composition may occur that are due first of all to reactions of oxidation and polymerization of the unsaturated hydrocarbons. The chemical stability of motor gasolines is characterized by the preformed gum in the fuel (in mg/100 ml) and by the induction period of oxidation (in minutes). Cracking and coking process gasolines containing an appreciable amount of alkenes have a low chemical stability.

To improve the chemical stability of gasolines containing components of a secondary origin, antioxidant additives (inhibitors) are incorporated into them. The following substances are employed as such additives: (1) antioxidant ДСА produced by the straight distillation of wood tar; (2) antioxidant ФЧ-16 produced on the basis of a mixture of phenols obtained in the semicoking of Cheremkhovo coals; and (3) synthetic inhibitors—4-methyl-2,6-di-*tert*-butylphenol (Ionol) (I) and *p*-hydroxydiphenylamine (II):

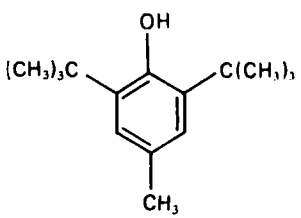

I

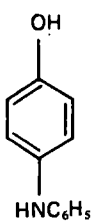

II

Shortcomings of the inhibitors ДСА and ФЧ-16 are their poor solubility, washing out with water, and separation from gasolines

in storage. The most effective antioxidant is Ionol. Antioxidant additives are introduced into gasolines in an amount from 0.007 to 0.15%.

Anticorrosive Properties. Carburettor engine fuels must produce no corrosion of the engine components. The quality indices used to appraise the anticorrosive properties of a gasoline are its acidity, total sulphur content, absence of water-soluble salts and alkalies, and the absence of active sulphur-containing compounds (tested by the change in colour of the surface of a copper plate if present).

At present, natural gas is coming into greater and greater use as a carburettor fuel in addition to gasoline. This is due to a number of reasons. The reserves of natural gas are considerably larger than those of gasoline. Gas is cheaper than high-octane gasoline, and it is delivered to all the regions of the country by gas pipelines. The octane number of gas is 105, which is higher than that of the best high-octane gasolines. Gas when mixed with air produces a much more uniform working mixture in all the cylinders than gasoline. The working mixture is leaner and it burns much more completely. The service life of an engine using gas is up to double that of an engine using gasoline; gas does not practically corrode the engine.

From the ecological standpoint, gas fuel produces no discharges of sulphur dioxide and tetraethyl lead, and reduces the amount of hydrocarbons in the exhaust.

A shortcoming of gas fuel is its low density (0.715 kg/m^3 for methane), which is almost one-thousandth of that of gasoline. This is why gas is employed either in the compressed or liquefied form.

A pressure of 20-25 MPa is used for compression, and the vehicles are provided with special cylinders. The gas is compressed and subjected to adsorption drying at special stations.

A liquefied propane-butane mixture at a pressure of 1.6 MPa is employed most frequently for passenger cars. This fuel is not inferior in its quality to natural gas, but owing to its high density is much simpler to use. Propane and butane cost more and are less available than natural gas, however.

3.3. Jet Fuels

Most aircraft are outfitted at present with jet engines—turboprop and turbojet ones. In these engines, the combustion process takes place in combustion chambers into which air compressed by a compressor is fed at a speed of 40-60 m/s and liquid fuel is injected. The fuel is ignited by an electric spark. In a turboprop engine, the formed gases expand in a turbine that rotates the compressor for compressing the air and an air propeller that produces the main thrust. In a turbojet engine, the gases expand in a turbine that rotates the compressor, and then in a thrust or jet nozzle. The thrust is produced as a result of the gases flowing out of the nozzle.

The main quality indices of fuels for air-feed jet engines are their specific gravity or density, heat of combustion, chemical composition and distillation range, viscosity, freezing point, the content of sulphur and active sulphur-containing compounds, gums, and unsaturated compounds, and their thermal stability.

The specific gravity and heat of combustion are energy characteristics of a fuel. The higher the heat of combustion, the more is the energy evolved from unit mass or volume, the higher is the speed of flow of the gases out of the nozzle, and, consequently, the flight speed and thrust magnitude.

The heat of combustion Q can be evaluated per unit of mass and per unit of volume. Its value depends on the hydrogen content and on the carbon:hydrogen ratio in a hydrocarbon molecule. When the heat of combustion is evaluated per unit of mass, alkanes have the highest values of Q, cycloalkanes are close to them, while arenes have much lower values. The opposite relation is obtained in calculations per unit of volume. Owing to the higher density of arenes, their heat of combustion is maximum.

In the standards for jet fuel, the lower heat of combustion Q_1 is stipulated to be not below 42 915-43 125 kJ/kg.

The efficiency and completeness of combustion of a jet-engine fuel also depend on its chemical composition. Fuel rich in arenes, and especially in bicyclic ones, is prone to form soot and carbon deposits, as a result of which glowing carbon particles appear in the gas stream. This leads to an increased intensity (brightness) of flame radiation. And when the radiation of the flame is greater, the service life of the engine decreases owing to overheating of the combustion chamber walls.

With a view to the unfavourable influence of arenes on the combustion process, and also to their reduced heat of combustion, the standards for jet fuel limit their arene content to 18-22%.

The tendency of jet fuels to form carbon deposits is also controlled by an index such as the smoke point, which should be at least 20-25 mm.

The nature (brightness) of the flame of fuels intended for supersonic craft is assessed by a special index—the **luminometric number.** It is inversely proportional to the brightness of the flame. The structural groups of hydrocarbons can be arranged in the following series according to the diminishing of their luminometric numbers: normal alkanes, isoalkanes, cycloalkanes, alkenes, alkadienes, arenes. Like the octane numbers of gasolines, the luminometric numbers of jet fuels are determined by comparison with standard or reference fuels. Tetralin and isooctane are employed as the test standard fuels. Their luminometric numbers are adopted equal to 0 and 100, respectively. The luminometric numbers of the best grades of jet fuel reach 60-75 units.

Density restrictions (at least 0.755-0.840 g/cm^3) are also introduced into the jet fuel standards because the higher the density, the more the amount of fuel that can be filled at a time into the restricted capacities of a craft's fuel tanks. This increases the flying range.

The distillation range of jet fuels is dictated by what the relevant grade of fuel is to be used for. Subsonic aircraft require light kerosenes with a boiling range of the order of 130-280 °C, whereas supersonic craft require fuels with a higher initial boiling point (165-195 °C) because these fuels must not boil in the fuel system and in the engine at an altitude of about 20 km.

Owing to the hygroscopicity of jet fuels, moisture accumulates in them. At low temperatures, ice crystals having the shape of thin spindles form in the fuel in the tanks of a craft. Such crystals also form if the ambient temperature rises sharply and the water vapour in the air comes into contact with the cold fuel. The formation of ice crystals may cause clogging of the fuel filters, and, consequently, result in an accident. An anti-icing additive, cellosolve (the monoethyl ether of ethyleneglycol) is used to prevent the crystallization of ice from fuel. When 0.1-0.3% of this additive is incorporated into the fuel, the formation of ice crystals stops completely at any operation temperature. Since cellosolve dissolves better in water than in fuels, when fuels come into contact with water during their transportation the additive may be washed out. This is why it is introduced into fuel not at the refineries, but directly at the places of use.

In modern aviation, greater and greater preference is being given to fuels based on hydrofined straight-run distillates. Hydrofining substantially decreases the content of total sulphur, unstable hydrocarbons, corrosively active mercaptans, and compounds of a non-hydrocarbon nature in the fuel. This is attended by an appreciable growth in the thermal stability of the fuel.

The removal in hydrofining of some non-hydrocarbon compounds, however, when these compounds are natural inhibitors of oxidation, results in the hydrofined fuel becoming prone to oxidation. Such fuel is oxidized in the fuel system of an aircraft engine especially rapidly, during a few hours, at an elevated temperature. The oxidation of hydrofined fuels is prevented by adding 0.003-0.004% of Ionol [2,6-di-*tert*-butyl-*para*-cresol].

The development of supersonic aviation has required that fuel has high antiwear (lubricating) properties, because the fuel is simultaneously a lubricant of the governing fuel apparatus. This requirement can be met only by incorporating antiwear additives into the fuel. This is done in an amount of 0.002-0.004%.

3.4. Diesel Fuels

In compression-ignition internal-combustion engines, called diesel engines, the four-stroke working cycle proceeds somewhat differently than in spark-ignition ones. In a diesel engine, the first two strokes are devoted to sucking in and compressing clean air. The temperature of the latter at the end of the compression stroke reaches 550-650 °C, and the pressure grows to 4 MPa. At the end of the compression stroke, a portion of fuel is injected at a high pressure into the compressed and heated air during a definite time. The very minute fuel droplets vaporize and are distributed in the air. In a definite, very short instant, the fuel self-ignites and completely burns up. The time between the beginning of injection and the ignition of the fuel is called the **delay period** or the **ignition lag.** In modern high-speed engines, this lag does not exceed 0.002 s. Combustion of the fuel raises the gas pressure to 6-10 MPa. The rate of gas pressure increase is very important for ensuring smooth, normal functioning of an engine. It is known from practice that this rate must never exceed 0.5 MPa per degree of crankshaft rotation. Otherwise the engine begins to knock, its operation becomes "rough", and the load on the bearings becomes excessive. The appearance of knocks and rough running of the engine are closely related to the duration of the ignition lag. The longer this period, the greater is the amount of fuel that has time to enter the engine cylinder. As a result, the simultaneous ignition of an increased amount of fuel leads to an explosive nature of combustion, and the pressure of the gases will grow in jumps. In the following two strokes — working and exhaust—the gases expand and perform work, and the engine cylinder is freed of the combustion products.

The kerosene and gas oil fractions of petroleum are used as the fuel for high-speed diesel engines. Heavier fuel of the fuel oil type is used for low-speed and stationary diesel engines.

The most important service property of diesel fuels is their ability to rapidly ignite and smoothly burn. This ensures a normal pressure increase and smooth running of the engine without knocks. The ignition properties of fuels depend on their chemical composition and distillation range. This is associated first of all with the self-ignition temperature of the fuel components. Arenes, for example, are known to have very high ignition temperatures (500-600 °C). It is thus clear that highly aromatized products cannot be employed as diesel fuel. Conversely, alkanes are characterized by the lowest self-ignition temperatures, and diesel fuels produced from paraffinic petroleums have good service properties.

The ignition properties of hydrocarbons and fuels, like the anti-knock properties of gasolines, are determined by comparison methods in laboratory testing installations, using standard fuels for comparison.

By analogy with the octane numbers, the motor properties of diesel fuels are assessed by their cetane numbers.

The **cetane number** is defined to be the volume fraction (in %) of cetane in a mixture with 1-methylnaphthalene equivalent in its self-ignition properties to the fuel being tested when the fuels are compared under standard test conditions.

The cetane number of cetane (hexadecane) $C_{16}H_{34}$ itself is taken equal to 100, and of 1-methylnaphthalene equal to 0. The cetane numbers are determined in a standard single-cylinder test diesel engine using the delay method. The cetane numbers of diesel fuels are rated within the interval of 40-50 units.

The cetane number characterizes not only the ignition properties, but also reflects some other service properties of diesel fuel. When the cetane number of diesel fuel is higher, its starting properties are better, the ignition lag is shorter, combustion of the fuel is more complete, the exhaust gases contain less smoke, and the fuel will deposit less carbon in the combustion chamber and fuel-injection nozzles.

Arenes, especially dicyclic ones, have the lowest cetane numbers. Cycloalkanes and dicycloalkanes occupy an intermediate place. Normal alkanes have the highest cetane numbers. Branching of alkane molecules leads to substantial lowering of the cetane numbers. The introduction of a double bond into a hydrocarbon molecule also lowers the cetane number.

Other important properties of diesel fuels for high-speed diesel engines include their distillation range, viscosity, pour point, carbon residue, sulphur content, acidity, and their content of water and mechanical impurities. All these indices are selected within limits such that ensure the normal and uninterrupted supply of fuel to an engine, the completeness of combustion, a reduction of carbon deposit formation, and the absence of corrosion.

Three grades of diesel fuel are marketed in the USSR depending on the conditions of their use, namely, summer (Л), winter (З), and arctic (А) fuels. The pour point of these fuels must not be higher than —5 °C for summer fuel, —35-45 °C for winter fuel, and —55 °C for arctic fuel. Winter and arctic fuels form about 30% of the total diesel fuel production in the USSR. They are produced on the basis of dewaxed fractions obtained in carbamide dewaxing and adsorption separation of liquid paraffin waxes, and also from light kerosene and gas oil fractions.

Diesel fuels are divided into two kinds with respect to their sulphur content: I—the mass fraction of sulphur is not over 0.2%, and II—the mass fraction of sulphur is not over 0.5%.

3.5. Petroleum Oils. Additives to Oils

3.5.1. Oils

The chief amount of petroleum oils is intended for use as lubricants. Their function is to lower friction between the solid surfaces of the mating parts of various mechanisms, machine tools, engines, motors, and machines, and prevent wear of the material of these parts. This is achieved by replacing dry friction of metallic surfaces, when a lubricant is introduced, with friction of the layers of a viscous liquid between each other. The force of cohesion between the molecules of the mating surface material and those of the lubricant exceeds the force of mutual cohesion between the molecules of the oil itself. Consequently, a strong lubricant layer forms on the surface of the metal that excludes any possibility of dry friction and greatly reduces mechanical wear of components. On the other hand, the coefficient of liquid friction, i.e. of friction between the layers of a viscid liquid, is only a small fraction of the coefficient of dry friction. Hence, when good lubrication is present, the amount of energy needed to overcome friction drops sharply. Moreover, lubricating oils play the role of a coolant.

The main service properties of petroleum lubricating oils are their viscosity, viscosity-temperature properties, oiliness, fluidity at low temperatures, chemical stability, and protective properties.

Viscosity. The requirements which the viscosity of petroleum lubricating oils must meet are very diverse and depend on the unit load, the nature and speed of the mating surfaces, and also on the temperature in the friction unit. For example, light distillate industrial oils must have a viscosity of 4-8.5 mm^2/s at 50 °C, whereas the most viscous residual oils for steam engines must have a viscosity of 60-70 mm^2/s.

In the oil fractions produced from the same petroleum, the viscosity grows with elevation of the fraction boiling range. If we compare, on the other hand, oil fractions having an identical distillation range, but produced from different petroleums or even from the same petroleum, but subjected to different refining, their viscosities may differ. This is explained by the different chemical composition of the fractions. Alkanes have the lowest viscosity, and their removal in refining increases the viscosity of oils. The viscosity of cycloalkanes and arenes is appreciably higher than that of alkanes.

Viscosity-Temperature Properties. Of major importance for oils functioning within a broad temperature interval (motor vehicle, aviation, jet-engine oils, etc.) is their viscosity-temperature characteristic.

Motor lubricating oils should have a viscosity-temperature curve with the gentlest possible slope. At high temperatures, these oils

must not become too fluid, and at low ones, conversely, not lose their fluidity. Polycyclic hydrocarbons with short side chains have the steepest viscosity-temperature curve, especially if the molecule contains more than three rings and the rings themselves are not condensed. The presence of long side saturated chains in the molecules of cyclic hydrocarbons improves this important index. Branching of the chains detracts from the positive effect. The viscosity-temperature properties of the high-molecular hydrocarbons of petroleum do not always meet the demands to modern motor oils. This relates especially to below-zero temperatures. This is why synthetic lubricating oils of a non-petroleum origin have begun to come into use.

The viscosity-temperature properties of lubricating oils are also improved by employing additives that increase the viscosity of the oils.

Two indices are used to assess the viscosity-temperature properties, namely, the viscosity factor and the viscosity index (VI). The **viscosity factor** is the ratio of the kinematic viscosities of an oil at 50 and 100 °C or at any other two temperatures corresponding to the extreme values of the temperature interval in which the oil being studied performs its functions. The **viscosity index** is determined by comparing the viscosity of an oil being studied with that of a reference oil. Special tables are used to determine the viscosity index in industrial practice. The best grades of lubricating oil have a viscosity index not lower than 100.

Oiliness (Lubricity). Under conditions when an oil functions at high loads, even its high viscosity cannot ensure a liquid lubrication regime. Under these conditions, a stable lubricating layer of a definite thickness cannot be obtained, and the oil can be almost completely forced out from under the mating surfaces. The **oiliness,** or **lubricity,** becomes a very important characteristic under such conditions. This term defines the ability of an oil to produce a very strong, but very thin (0.1-1.0 μm) lubricating layer on a metallic surface. This kind of lubrication is called **boundary lubrication.** The wear of materials with boundary lubrication decreases thousands of times in comparison with dry friction. Special surfactant additives are incorporated into oils to improve their lubricity.

Fluidity at Low Temperatures. Oils for refrigerating machines, instrument and motor oils must, in accordance with their service conditions, not lose their fluidity at temperatures down to —60 °C. In the technical standards, this quality of oil is controlled by determining its pour point. The latter depends on the presence of solid paraffin waxes and ceresines in oils that freeze at low temperatures. A crystal lattice is created that confines the liquid hydrocarbons, and the entire system loses its fluidity.

Loss of Fluidity. An oil may solidify at low temperatures for another reason. High-molecular hydrocarbons with a high viscosity

level have the tendency of experiencing association of their molecules at low temperatures, and this, in turn, results in a sharp increase in the viscosity. To improve the low-temperature properties of petroleum oils, it is necessary first of all to remove solid hydrocarbons and also polycyclic hydrocarbons with short side chains and resinous and asphaltenic substances.

The fluidity at low temperatures is also improved by introducing additives that lower the pour point. They are known as **depressants.**

Chemical Stability. An important property of oils used under conditions of circulation lubrication, i.e. that are repeatedly fed through the lubrication units (motor, turbine, compressor, and other oils), is their chemical stability relative to the oxygen of the air.

Under operating conditions, oil experiences the effects of a number of factors sharply accelerating the oxidation processes: elevated temperature, the catalytic influence of various metals, contact with the air, and the autocatalytic effect of the oxidation products. Oil is oxidized either throughout its entire volume (in a thick layer), or in a thin layer when it is fed through the cylinder-piston friction units. In the latter case, the oil is under especially severe operating conditions—an elevated temperature, contact with the oxygen of the air and metal.

The accumulation of various oxidation products in oil has harmful consequences. The low-molecular acids intensively corrode metals. The high-molecular acids in the presence of oxygen and water react with the iron hydroxide formed under these conditions:

$$Fe(OH)_2 + 2RCOOH \rightarrow (RCOO)_2Fe + 2H_2O$$

Salts of the higher acids dissolve poorly in oils, precipitate, and accumulate in the form of sludge on the surfaces being lubricated and in the circulation oil system. Moreover, these salts catalyze the primary oxidation reactions.

The high-molecular reaction products (gums, asphaltenes, carbenes) are deposited in the oil-feed system, clog it, and are one of the causes of carbon deposit formation in engine and compressor cylinders. Oxyacids and their condensation products also dissolve very poorly in hydrocarbons. Therefore, they either form carbonaceous deposits or are deposited on various parts of the piston group of an engine in the form of a thin and very strong layer reminding one in its appearance of a varnish coating.

Cycloalkanes with a small number of rings, arenes, and hybrid hydrocarbons with long side chains have the best properties from the viewpoint of chemical stability. Polycyclic arenes and cycloalkanes with short side chains are readily oxidized.

The resistance of oils to the action of oxygen is characterized by their corroding activity, tendency to varnish formation, and ten-

dency to deposit formation in internal-combustion engines. These indices are determined by a set of methods of laboratory and motor tests.

Protective Properties. Petroleum oils must also comply with the requirement of causing no chemical corrosion of metals. Oils must have a low acid number both in the initial period of their use and in the course of service. They must contain no sulphurous compounds causing corrosion.

3.5.2. Additives

Quite often lubricating oils, even when produced with the use of the most up-to-date refining methods, do not completely comply with customers' demands. The required service properties can be ensured by incorporating various additives into the base oil—a refined petroleum fraction.

Additives are incorporated into all types of motor oils, into turbine, compressor, transformer, transmission, and certain industrial oils.

The following types of additives are used: antioxidant, anticorrosion, depressants (pour-point), viscous, antiwear, detergent (antisludge), antifoam, and multifunctional ones.

Antioxidant Additives (Oxidation Inhibitors). Depending on the field of application of the oils, antiacid additives are divided into low- and high-temperature ones. The low-temperature ones (Ionol, *p*-hydroxydiphenylamine, etc.) are added to turbine, transformer, and industrial oils experiencing oxidation in their volume (thick layer). Motor oils, which experience oxidation in a thin layer, are improved by incorporating high-temperature additives such as the salts of dithiophosphoric acid esters (the additives ДФ-1, ДФ-11, МНИ-ИП-22к, ВНИИНП-354, etc.).

Anticorrosive Additives. To combat corrosion, special anticorrosive additives are incorporated into oils. They are mainly polar substances that are readily adsorbed on metal surfaces. The mechanism of their action consists in creating a protective monomolecular layer on the surface of a metal that prevents acidic and other active agents from acting on it.

The anticorrosion additives introduced into oils include sulphurized oils, sulphurized esters of ricinoleic and oleic acids, sulphides of alkylphenols, phosphites (esters of phosphorous acid), and also thiophosphoric additives containing sulphur and phosphorus simultaneously. All these substances readily create a protective film on a metal.

Depressants. These additives are employed to lower the pour point and improve the pumping properties of petroleum oils at low temperatures.

Depressants are also sometimes used for jet and diesel fuels. Their production began about 50 years ago. At present, the depressants АФК, АзНИИ-ЦИАТИМ-1, and ПМА-Д are produced in the USSR:

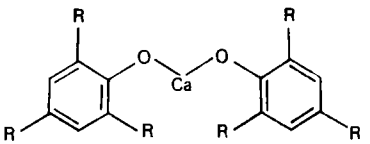

АФК (calcium alkylphenolate)

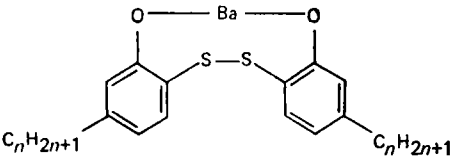

АзНИИ–ЦИАТИМ–1

The incorporation of these additives into fuels and oils makes it possible to lower their pour points by 20-30 °C, and sometimes even more.

There is no single opinion on the mechanism of action of depressants. They are probably not able to prevent the initial crystallization of paraffin waxes. Their action apparently consists mainly in that they hinder the growth of the wax crystals, destroy the structure of the crystal lattices, and thus shift the temperature of the loss of mobility to the region of lower temperatures.

Additives Improving the Viscous Properties of Oils (Viscosity-Index Improvers). These are substances which when mixed with low-viscosity oils substantially increase their viscosity at above-zero temperatures and do not affect it appreciably at below-zero ones. Consequently, the incorporation of these additives makes it possible to transform low-viscosity oils into high-viscosity ones that are also characterized by a gently sloping viscosity-temperature curve.

A variety of highly viscous polymers are used as the viscosity-index improvers. Polyisobutylenes are the most popular among them.

The polyisobutylenes employed as an additive have a molecular mass ranging from 15 000 to 25 000. The ones with a higher molecular mass have a better solubility in oil and a higher thermal stability.

The structure of the additive is:

$$\ldots-CH_2-\underset{\underset{CH_3}{|}}{\overset{\overset{CH_3}{|}}{C}}-CH_2-\underset{\underset{CH_3}{|}}{\overset{\overset{CH_3}{|}}{C}}-CH_2-\underset{\underset{CH_3}{|}}{\overset{\overset{CH_3}{|}}{C}}-CH_2-\underset{\underset{CH_3}{|}}{\overset{\overset{CH_3}{|}}{C}}-CH_2-\ldots$$

In addition to polyisobutylenes, other polymer products are also used as viscosity-index improvers, for example, polymers of methacrylates $CH_2{=}C(CH)_3COOR$. There are many varieties of the polymers of this type depending on the length of the carbon chain in the alcohol part of the molecule R. Polymethacrylates with a molecular mass of 2700-3700 (B-1) and 12 000-17 000 (B-2) are

produced in the USSR. These additives are simultaneously viscosity-index improvers and depressants. Polyalkylstyrenes and other polymers are also employed.

A shortcoming of many polymer additives is their insignificant thermal and mechanical stability.

Antiwear or Antiscuff Additives. Under boundary lubrication conditions, when components experience enormous pressures, which increases the danger of rapid wear and scuffing, special additives must be incorporated into oils to improve their lubricating ability. This is especially important for transmission and similar oils intended for lubricating various geared, hypoid, and worm transmissions where pressures up to 3000 MPa are developed.

Very many various surfactants capable of creating a strong boundary layer have been proposed as such additives. Higher fatty acids such as oleic and stearic acids, natural fats and oils, sulphurized oils, and also special synthetic additives have come into use. Among them are additives of the xanthate type ЛЗ-6/9—ethylenedibutylxanthate

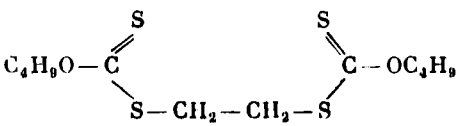

and ЛЗ-23к—ethylene diisopropylxanthate.

Detergent and Dispersing Additives. Lubricating oils for internal-combustion engines function under conditions facilitating their high oxidation and thermal decomposition, which in the long run results in the deposition of various precipitates, carbon particles and in the formation of varnish films on the engine components. The amount of deposits formed can be reduced by incorporating detergent and dispersing additives into oils.

Detergent additives contain compounds whose molecules have long alkyl chains and polar groups. The alkyl chains facilitate the creation of affinity to the oil, while the reactivity of the polar groups enables the additives to be adsorbed on the metallic surfaces of an engine, which prevents the adhesion of carbonaceous and gummy materials. Moreover, the detergent additives can react with the intermediate oxidation products and prevent their condensation with the separation of gums, varnish, and precipitants.

The following substances are used as detergent additives:

(1) calcium and barium sulphonates produced from oil-soluble sulphoacids formed in the sulphonation of the oil-fractions (the additives ПМС$_я$, СБ-3, С-300);

(2) barium and calcium alkylphenolates, as well as sulphides of alkylphenols and the products of their condensation with aldehydes (the additives ЦИАТИМ-339, ВНИИНП-360, ВНИИНП-370, БФК, etc.);

(3) calcium alkylsalicylate (the additive АСК):

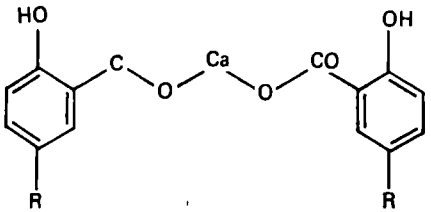

where R is a side alkyl chain with 14-18 carbon atoms.

A feature of dispersing additives is their ability to disperse (finely comminute) large amounts of solid particles and keep them in a suspended state. New ash-free succinimide additives have come into use as dispersing agents in recent years. They are high-molecular synthetic substances—alkenylsuccinimides of the type:

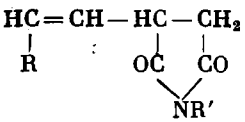

where R—CH=CH is the residue of a polyalkene of a various molecular mass (from 300 to 3000), and R′ is a polyethylenepolyamine residue.

Antifoam Additives. Stable oil foams can form both in aircraft engines when operating at high altitudes and in motor vehicle engines at very high speeds. For a number of technical reasons, the strong foaming of oil cannot be tolerated. To combat this undesirable phenomenon, antifoam additives (defoamants) are employed that can not only prevent the formation of a foam, but also destroy such an air-oil colloidal system. The antifoam additives function by lowering the strength of surface oil films owing to the adsorption of the additive molecules on them. The best additives of this type are organosilicon compounds—silicones or polysilicones, from among which polymethylsiloxane ПМС-200А has found the greatest use in industrial practice.

Versatile Additives. A glance at the above list of additives reveals that whole compositions of additives have to be incorporated into petroleum lubricating oils to impart high service properties to

them. This is costly and inconvenient, and, moreover, sometimes the action of some additives is paralyzed by the action of others. This is why versatile additives capable of simultaneously improving various properties of oils are of major interest.

Versatile additives can either be mixtures of additives with a different effect, or specific complex organic compounds containing sulphur, phosphorus, metals, and various polar functional groups.

Many of the additives mentioned above also relate to versatile ones, having in view their action on different service indices of separate groups of oils. This mainly relates to the detergent additives. For example, the additive СБ-3 is not only a detergent, but also an antiwear agent, БФК has antioxidant and anticorrosion properties, and АСК is an antioxidant. Succinimide additives can neutralize acid compounds accumulating in oil, and they also improve the viscosity-temperature characteristics.

The depressant АзНИИ-ЦИАТИМ-1 is a typical versatile additive because it simultaneously has detergent and anticorrosive properties. The versatile additives ДФ-11 and ЭФО have also become quite popular. The additive ДФ-11—zinc isobutyl-2-ethylhexyldithiophosphate

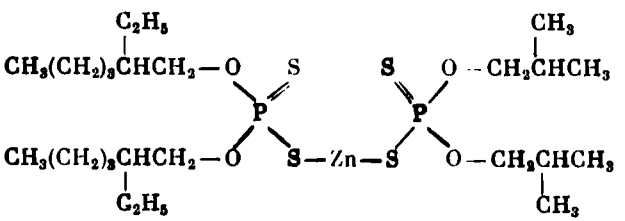

has antiwear, detergent, antioxidant, and anticorrosive properties.

The additive ЭФО has the following structure:

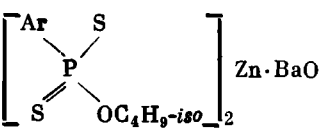

where Ar is the residue of high-molecular aromatics from the phenol treatment extract. This compound has antiwear and antioxidant properties.

Mixed or complex additives are also related to the versatile ones. Thus, the additive ВНИИНП-360 having detergent, antiwear, antioxidant, and anticorrosive properties is a mixture of barium alkylphenolate and zinc dialkylphenyldithiophosphate in the ratio 5 : 2.

3.6. Chemmotology. Methods of Assessing Fuel and Oil Quality

The quality of the most important petroleum products, primarily motor fuels and lubricating materials, is at present a key problem in the petroleum refining industry. As we have shown in Secs. 3.2-3.5, the problem of the quality of petroleum products is closely related to the conditions of their employment and service in engines and machines.

The overall quality of a product can be established and assessed only by determining or measuring the most diverse physical, chemical, and service properties reflecting the suitability and effectiveness of using the given product under definite specific conditions of storage, transportation, and use.

Studying of the properties, quality, and ways of the rational application of fuels, lubricants, and special liquids has recently branched out into a new science called **chemmotology**.

Chemmotology divides all the properties of fuels, lubricants, and special liquids into physicochemical, service, and ecological ones. The physicochemical properties (density or specific gravity, viscosity, heat of combustion, volatility, oxidability, permittivity, and so on) characterize the petroleum product itself and its chemical nature.

The service properties (knock, tendency of carbon deposit formation, detergent, corrosion, antiwear, starting, and others) manifest themselves only when a product is employed in engines, mechanisms, and in fuel, oil, and hydraulic systems.

The ecological properties (toxicity, fire and explosion hazard, stability in storage and transportation, ability of affecting contamination of the environment, and others) manifest themselves in contact with living organisms of the animal and plant world, with various mechanisms, in storage, transportation, and filtration.

The quality of fuels, lubricating materials, and special liquids is assessed and their diverse properties are determined by numerous physicochemical methods, qualification tests in model setups, and, finally, service tests in full-size engines and machines.

The qualification methods of testing in which real conditions of service of a product are modelled enable one to study and register the behaviour of the product under these conditions. From the viewpoint of chemmotology, these methods are the most promising. Lately they have made great strides in their development and are being used very successfully. These methods are now used to run combined tests of separate kinds of fuels, oils, and lubricants to completely assess their quality. The final stage in studying the possibility of using new kinds of a fuel or lubricating material is the conducting of prolonged service tests under real conditions according to a special programme.

Chapter 4

PREPARATION OF PETROLEUM FOR PROCESSING

4.1. Gathering and Preparation of Petroleum at Fields. Petroleum Stabilization

Gathering and Transportation Systems. The petroleum extracted to the Earth's surface from wells is called crude because it contains stratum water with dissolved salts, gases of an organic (from CH_4 to C_4H_{10}) and inorganic (H_2S, CO_2) origin, and also mechanical admixtures (sand, clay, limestone). Every tonne of extracted petroleum contains 50-100 m^3 of casing-head gas and 200-300 kg of water. Prior to transportation and feeding the petroleum (feed stock) to a refinery, the gases, mechanical admixtures, and the main part of the water and salts must be removed from it.

Various systems are used at petroleum fields for gathering and transporting petroleum. They differ in the conditions of transportation of the petroleum and gas and the scheme used to separate the gas from the petroleum. Up to recent times, unpressurized, two-line, gravity-type systems were used at most fields. Such a system is called a two-line one because the petroleum and gas are separated in separators installed near the mouths of the wells and are transported to the central gathering station along two independent pipelines. It is called a gravity-type system because the petroleum flows from the mouth of a well to the gathering station at the expense of the difference of their geodetic elevations.

An unpressurized gravity-type system for the gathering and transportation of petroleum, gas, and water is shown schematically in Fig. 6*a*. The petroleum, gas, and water from well *1* flow into individual measuring unit (IMU) *2* in direct proximity to the wells. The petroleum and water separated in the IMU from the gas flow along gravity lines *4* into areal unpressurized tanks *5* of the gathering station. The petroleum is taken up from tanks *5* by pumps *6* and is fed via gathering main *7* to petroleum preliminary treatment plant (PPTP) *9*. If the relief of the terrain is favourable, pumps *6* are not installed, and main *7* is also a gravity one. The water settling in tanks *5* is discharged into the sewerage system. The gas separated from the petroleum in the IMU is transported to a gas plant (GP).

Figure 7 is a schematic view of an individual measuring unit. Examination of the figure shows that the crude petroleum from a well first flows into separator (trap) *1*, and next the petroleum flows over into gauge tank *2*. If the terrain is hilly, tank *2* is set up on the ground, while if it is level, the tank is mounted on pedestal *3*.

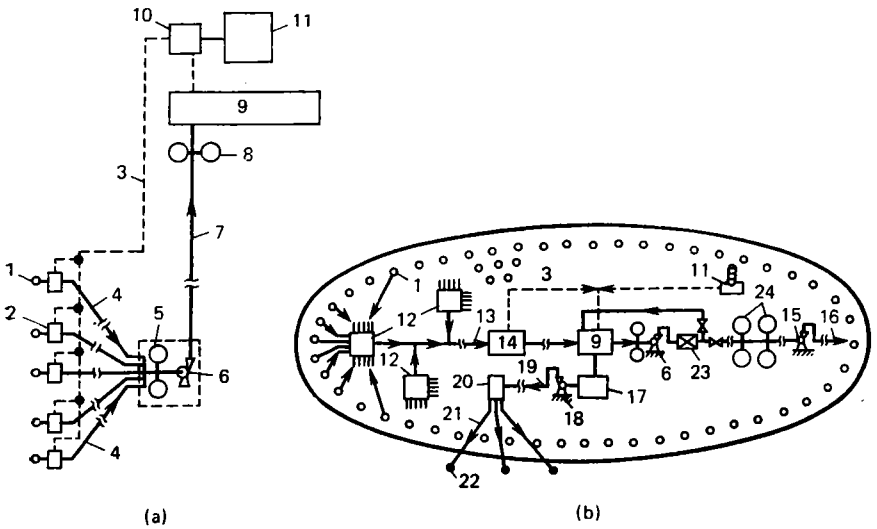

Fig. 6. Gravity-type (*a*) and pressure-sealed (*b*) systems of gathering petroleum, gas, and water at fields:

1—well; *2*—individual measuring unit (IMU); *3*—gas line; *4*—gravity flow line; *5*—areal tanks of gathering station; *6*, *15*, *18*—pumps; *7*—gathering main; *8*—crude stock tanks; *9*—petroleum preliminary treatment plant (PPTP); *10*—compressor plant; *11*—gas plant (GP); *12*—group measuring units (GMU); *13*—petroleum, gas, and water gathering main; *14*—boosting pumping station; *16*—petroleum trunk line; *17*—water treatment plant; *19*, *21*—water lines; *20*—group pumping station; *22*—injection wells; *23*—automatic plant "Rubin"; *24*—storage tanks for prepared petroleum

The latter is needed to provide conditions for the gravity flow of the petroleum to the areal gathering station.

Gravity-type petroleum gathering systems have a number of substantial shortcomings: because of the low speed of the liquid in them, deposits of mechanical admixtures, salts, and paraffin wax form in them; and because of the presence of open gauge tanks and reservoirs, the losses of gas and light fractions are high and can reach 3% of the total volume of the petroleum. It is difficult to automate these systems, and many attendants are needed to operate them.

At new petroleum fields, various gas-tight pressure-sealed systems are used for gathering petroleum, gas, and water. The flow diagram of the gathering system is determined by the size and shape of the field area, the relief of the locality, and by the physicochemical properties of the petroleum. Figure 6*b* depicts such a system typical of a large field.

The crude petroleum from the mouth of well *1* is directed under its own pressure via flow lines one to three kilometres long to group measuring units (GMU) *12*. Here the petroleum gas is separated from the liquid, and the amount of products obtained is measured

automatically. Next the gas is again mixed with the water and petroleum. The mixture flows along gathering main *13* up to eight kilometres long to boosting pumping station *14* containing first-stage separators for separating the gas from the petroleum. The gas is fed from the separators under its own pressure to gas plant *11*, while the partly degassed petroleum is fed to petroleum preliminary treating plant *9*. Here the second and third stages of gas separation, dehydration and desalting of the petroleum are carried out. The gas

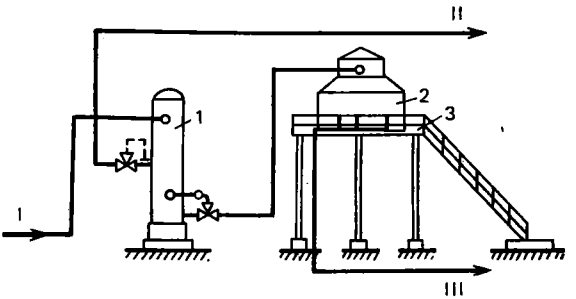

Fig. 7. Individual measuring unit:
1—separator (trap); *2*—gauge tank; *3*—pedestal; *I*—petroleum from well; *II*—gas to gas plant; *III*—petroleum to gathering station

from plant *9* is fed to gas plant *11*, while the water is fed to water purification plant *17*. The pumps of group pumping station *20* deliver the purified water into the stratum via injection wells *22*.

The petroleum after dehydration and desalting in petroleum treatment plant *9* is delivered into gas-tight tanks, and is then pumped by pumps *6* into the automatic plant "Rubin" intended for assessing the quality and quantity of petroleum. Next the petroleum is delivered into storage tanks *24* from which pumps feed it into trunk line *16* transporting it to petroleum refineries. If it is established at the "Rubin" plant that the petroleum does not meet the quality requirements, it is returned to the preliminary treatment plant.

Gas-tight systems eliminate losses of light petroleum fractions, and allow the petroleum to be transported over the entire area of a field at the expense of the pressure at the well mouths.

Stabilization. It has already been indicated that the petroleum extracted from wells contains a considerable amount of light hydrocarbons with one to four carbon atoms. The major part of them can be lost during the storage and transportation of the petroleum. To eliminate the losses of gases and of the light gasoline fractions together with them, and also to prevent contamination of the atmosphere, the greatest possible amount of the C_1-C_4 hydrocarbons must be

extracted from petroleum before delivering it to the refineries. The process of removing the light hydrocarbons from petroleum and its fractions is called **stabilization.**

Depending on the specific conditions and the requirements which the quality of the products must meet, petroleum is stabilized with the employment of separation and rectification processes. Separation involves the extraction of the light fractions by single-fold and multifold evaporation at a reduced pressure. As can be seen from Fig. 6, separation is performed at the individual measuring units, boosting pumping stations, and petroleum preliminary treatment plants. Petroleum stabilized by separation retains up to 1.5-2.0% of the C_1-C_4 hydrocarbons. For the greater extraction of the light hydrocarbons, the petroleum is delivered to special stabilizers containing rectification columns. The products of these plants are (a) stable petroleum, and (b) gas condensate that is delivered to central gas-fractionating plants. The latter are located at large petrochemical enterprises and are intended for separting the gas condensate from several stabilizers into the individual hydrocarbons.

At the major Soviet petroleum fields, combined plants for the preparation of petroleum have been erected at which the petroleum is dehydrated, desalted, and stabilized.

4.2. Processing of Natural and Casing-Head Gases

Natural Gases. Natural gas recovered from wells contains water vapour, liquid water, carbon dioxide, hydrogen sulphide, nitrogen, and helium. The hydrogen sulphide and carbon dioxide cause intensive corrosion of the gas gathering and transportation systems, while the presence of water may result in the formation of solid hydrates deposited on the walls of gas pipes, which lowers their handling capacity. This is why natural gas prior to transportation over long distances is dried and purified.

Natural gas is dried by liquid (ethyleneglycol, di- and triethyleneglycols) and solid (alumina, silica gel, molecular sieves) desiccants. At Soviet fields, amines (mono- and diethanolamines) are used to purify a gas from H_2S and CO_2. If a natural gas contains many C_3 and C_4 hydrocarbons, they are preliminarily separated from the gas at gas plants.

The purified and dried natural gas is compressed at compressor stations and transported over trunk gas pipelines to its consumers, who may be several thousand kilometres from the gas field.

Casing-Head Gas. Gas Plants. Casing-head gas (also called accompanying, associated, or petroleum gas), as well as natural gas when required, is processed at gas plants. The following operations are involved:

(1) extraction from the gases of unstable gasoline—hydrocarbons with three or more carbon atoms (gas-gasoline processing or stripping);

(2) compression of the stripped gas to the pressure needed to pump it to the consumers;

(3) separation of the unstable gasoline into its individual hydrocarbons—propane, isobutane, butane, and stable gasoline.

Gas plants also have equipment for drying the gas and removing hydrogen sulphide from it. Both stationary and mobile gas plants are provided at petroleum fields. A mobile plant has a capacity of 40-100 thousand cubic metres of gas a day, and its equipment is mounted on carriages or flat cars.

The approximate composition (in %) of the feed stock and products of a gas plant is given below:

	CO_2	N_2	CH_4	C_2H_6	C_3H_8	*iso*-C_4H_{10}	*n*-C_4H_{10}	*iso*-C_5H_{12}	*n*-C_5H_{12}	C_6H_{14} and higher
Feed stock—casing-head gas	1.1	3.8	23.2	28.0	29.8	3.2	5.4	1.5	2.0	2.0
Dry stripped gas	2.2	7.6	35.9	32.6	17.2	1.2	2.5	0.4	0.4	—
Unstable gas gasoline	—	—	7.4	24.6	40.8	5.1	12.2	0.2	4.0	3.9

Recent years have seen the discovery of major gas-condensate fields in the USSR and other countries. The gas condensate is processed at gas plants. The first stages are similar to the processing of casing-head gas. Next the stable condensate is divided into several fractions (gasoline, kerosene, diesel, residual).

4.3. Dehydration and Desalting

The presence of water and salts in petroleum delivered for refining harmfully affects the operation of the refinery. When the water content is high, the pressure in the petroleum distillation apparatus grows, its productivity decreases, and excessive heat is spent to heat and evaporate the water.

Salts, mainly chlorides, have a still more adverse effect. They are deposited in the tubes of the heat exchangers and furnaces, which requires frequent cleaning of the tubes and lowers the heat transfer coefficient. Calcium and magnesium chlorides hydrolyze with the formation of hydrochloric acid. The latter corrodes the metal of the technological apparatus. Finally, the salts accumulating in the residual petroleum products—fuel oil and tar (residual stock), detract from their quality.

Consequently, prior to delivering petroleum to a refinery, it must be freed of water and salts. The first stage of water and salt removal is performed at the field petroleum treatment plants. Depending on the degree of their preparation at fields, three groups of petroleum are distinguished that differ in their content of residual water (0.5-

1.0%) and chlorides (100-1800 mg/litre). At refineries, the second stage of dehydration and desalting of petroleum is performed, when the water content is lowered to 0.05-0.1%, and that of salts to 3-5 mg/litre and less.

Both at the field and the refinery petroleum treatment plants, the process of destroying petroleum emulsions (demulsification) is employed, but at field plants the natural emulsions formed in the course of extraction of the petroleum are destroyed, while at refineries artificial emulsions specially prepared from petroleum and fresh water are destroyed.

4.3.1. Petroleum Emulsions

Conditions of Formation. By an emulsion is meant such a system of two mutually insoluble or not completely soluble liquids in which one of them is contained in the other one in the suspended state in the form of an enormous number of microscopic droplets (globules), as many as several million millions per litre of emulsion. The liquid in which the globules are distributed is called the **dispersing medium**, and the second liquid distributed in the dispersing medium is the **dispersed phase.**

Petroleum emulsions are coloured from light yellow to dark brown. They are mostly emulsions of the water-in-oil type, in which petroleum is the dispersing medium and water is the dispersed phase. Such emulsions are hydrophobic: they float in water, and are uniformly distributed in naphtha or other solvents. Emulsions of the oil-in-water type in which water is the dispersing medium are less frequent. They are hydrophilic—they are uniformly distributed in water and sink in gasoline or naphtha.

The formation of emulsions is associated with surface phenomena. The surface layer of a liquid at its interface with air or another liquid is known to be characterized by a definite surface tension, i.e. the force with which the liquid resists an increase in its surface area. The surface tension of petroleum and its products varies from 0.02 to 0.05 N/m.

Experiments show that the addition of certain substances to pure petroleum fractions causes their surface tension to lower at the interface with water. This phenomenon is of a general nature.

Sometimes substances when dissolved even in very minute concentrations substantially lower the surface tension of the solvent. Substances capable of lowering the surface tension are said to be surface-active. Surfactants generally include a hydrocarbon radical (the hydrophobic part of the molecule) and a polar group (the hydrophilic part of the molecule). The lowering of the surface tension of a two-phase liquid system at the phase interface because of the action of polar substances is explained by the fact that the added

substance is distributed unevenly in the component of the system that is the solvent relative to it. Its concentration at the phase interface will be higher than throughout the entire volume of the solvent. In other words, the added polar substance will be adsorbed by the surface layer of the solvent and thus reduce its surface energy. As a result, an adsorbed layer forms at the phase interface that can be treated as a film of the surfactant molecules on the solvent surface.

Any emulsion, including a petroleum one, can form only when mechanical action on a mixture of two mutually insoluble liquids causes dispersion, i.e. breaking up of the liquid into very fine particles. When the surface tension of the liquids is lower, droplets will form, i.e. the total surface area of the liquid will grow more readily because this will require less work to be done. But after the mixing of two pure liquids insoluble in each other, the stability of the resulting emulsion is usually not high. The heavier liquid will settle to the bottom, while the droplets of the dispersed phase will collide with one another and combine into larger ones. Both these processes will lead to separation of the emulsion into two layers (stratification). Only at a very high degree of dispersion, when the diameter of the dispersed phase droplets is measured by tenths of a micrometre (10^{-7} m) and the intermolecular forces balance the gravitational ones, does it become difficult to destroy the emulsion.

Matters are different if a mixture of two insoluble liquids is under conditions facilitating dispersion and a surfactant is present in it that lowers the surface tension as a result of the formation of an adsorption layer. Firstly, this facilitates comminution of the droplets, and secondly (which is of the decisive importance), the droplets will be surrounded not by molecules of the dispersing medium, but by a firm film of the adsorption layer. In this case, stable emulsions stratifying with difficulty form because the droplets of the dispersed phase protected by what resembles a shell—an adsorption film, cannot merge with one another. Sometimes the adsorption film has a thickness such that allows it to be examined under a microscope.

Substances promoting the formation and stabilization of emulsions are called **emulsifiers.** They include polar substances of petroleum such as resins, asphaltenes, asphaltogenic acids and their anhydrides, salts of naphthenic acids, and also various inorganic admixtures.

Various solid hydrocarbons—microcrystals of paraffin waxes, ceresines, and mixed alkane-cycloalkane hydrocarbons—participate in the formation of stable petroleum emulsions. They are adsorbed on the surface of the emulsion globules and form an "armour". Resins are most often the emulsifiers in crude petroleum. They dissolve well in petroleum and do not dissolve in water. The resins are adsorbed on the petroleum-water interface, get into the surface layer from the side of the petroleum, and produce a firm shell around the water particles.

The aluminium, calcium, magnesium, and iron soaps of the petroleum acids dissolve well in petroleum and its distillates, therefore they also facilitate the formation of hydrophobic emulsions. Conversely, the sodium soaps of the petroleum acids dissolve well in water and worse in hydrocarbons. They are therefore adsorbed in the surface layer from the side of the aqueous phase, envelope the petroleum droplets with a film, and thus form a hydrophilic emulsion of the type of petroleum in water.

When emulsifiers of both kinds are present, inversion of the emulsions may occur, i.e. their transition from one kind to the other. This phenomenon is sometimes employed to destroy emulsions.

Properties of Petroleum Emulsions. These emulsions are characterized by the following physicochemical properties: dispersion, viscosity, specific gravity (density), electrical properties, and stability.

By **dispersion** is meant the degree of comminution of the dispersed phase in the dispersing medium. The size of the dispersed phase droplets in emulsions varies from 0.1 to 100 μm. The viscosity of petroleum emulsions is higher than that of water and petroleum. The electrical conductance of emulsions depends on the water content, the dispersion of the emulsion, and also on the amount of salts and acids dissolved in the water.

The stability of petroleum emulsions, i.e. their ability to remain undestroyed and not stratify into petroleum and water during a definite time, is affected by the dispersion, the temperature of the mixing liquids, and by the presence of emulsifiers in the composition of the emulsions.

Methods of Destroying Petroleum Emulsions. This mechanism consists of several stages: (1) collision of the globules (particles) of water; (2) merging of the globules into larger drops; and (3) separation of the drops.

The following methods are used in industry to destroy emulsions: (1) mechanical; (2) thermal; (3) chemical; and (4) electrical.

The mechanical methods include settling, centrifuging, and filtration. Settling is employed for separating the main mass of the water in the crude petroleum tanks of the field gathering systems. Filtration and centrifuging have meanwhile found no practical application.

In the thermal method, heating of an emulsion causes the emulsifier film to expand and burst, and the liquid droplets merge.

The chemical method is quite popular for destroying emulsions. It consists in treatment with demulsifiers—substances that weaken the structural and mechanical strength of the layers enveloping the water droplets. A variety of surfactants are employed as demulsifiers, but the mechanism of their action on an emulsion is very involved and has been studied insufficiently. Ion-active and non-ionogenic

demulsifiers are distinguished in accordance with how they behave in aqueous solutions. The former dissociate in solutions into cations and anions, whereas the latter form no ions. The best demulsifying effect is exhibited by the following non-ionogenic demulsifiers used at present at fields and petroleum refineries: proxamine, dissolvan, progalite, and hydroxyethylated fatty acids.

The electrical method of destroying emulsions is based on the fact that an electric field produces favourable conditions for an increase in the probability of water globule collisions. When a petroleum emulsion gets into an alternating electric field, the negatively charged water particles begin to move inside a drop. The latter acquires a pear-shaped form with its sharp end facing the positively charged electrode. Changing of the electrode polarity causes the configuration of the drop to change. Separate drops tend to move in the electric field toward the positive electrode, collide with one another, merge into larger drops, and settle.

Combined methods of demulsification such as the thermochemical and electrothermochemical ones are widely used in industry to remove water and salts from petroleum.

4.3.2. Dehydration and Desalting of Petroleum at Fields

The methods of pipeline and thermochemical demulsification are used the most at petroleum fields.

The principle of pipeline (downhole) demulsification consists in the following. A demulsifier is fed into the interpipe space of operating wells or into the beginning of the gathering main in an amount of 15-20 g per tonne of crude petroleum. In the process of flow of the petroleum from the well mouth to the petroleum treatment plant, the demulsifier destroys the emulsion. The efficiency of the process depends on a number of factors, namely, the intensity and duration of mixing the emulsion with the demulsifier, the temperature of the stream, and the amount of water in the emulsion. The use of pipeline demulsification made it possible to increase the capacity of existing petroleum treatment plants and improve the quality of the treatment.

About 80% of the petroleum produced at the fields of the USSR is dehydrated in thermochemical plants. The simplest plants for thermochemical dehydration operate at atmospheric pressure. A demulsifier is added to the petroleum, after which it is heated and fed into a reservoir for settling. When petroleum is processed in this way, large losses of the light products are possible when the petroleum settles in unsealed tanks.

These shortcomings are eliminated in thermochemical dehydration under pressure (Fig. 8). The crude petroleum after the removal of

gas is pumped from tank *1* by pump *2* through heat exchanger *3* and steam heater *4* into thermal settler *5*. A demulsifier is introduced into the petroleum before it is picked up by the pump. The petroleum is kept in the thermal settler under a pressure of about 1.5 MPa for one to three hours. The dehydrated petroleum is directed into reservoir *6* via heat exchanger *3*. The petroleum is additionally separated from water in the reservoir. The water from settler *5* and reservoir *6* is discharged into petroleum trap *10*, and is then

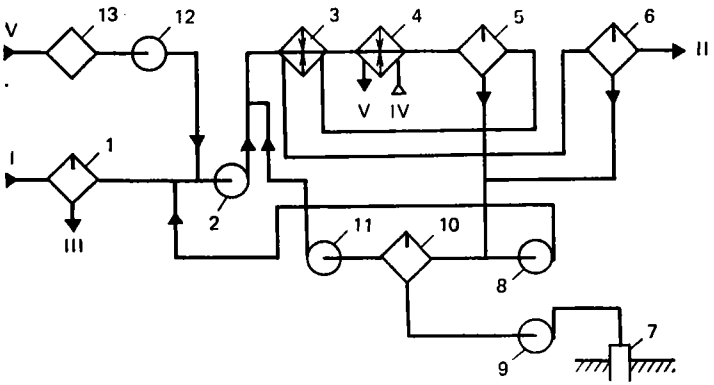

Fig. 8. Diagram of a plant for the thermochemical dehydration of petroleum under pressure:

1, 13—tanks; *2, 8, 9, 11, 12*—pumps; *3*—heat exchanger; *4*—steam heater; *5*—thermal settler; *6*—reservoir; *7*—well; *10*—petroleum trap; *I*—crude petroleum; *II*—dehydrated petroleum; *III*—water; *IV*—steam; *V*—demulsifier

pumped into well *7*. Part of the sewage is returned by pump *8* to the intake of the feed stock pump so as to reuse the demulsifier contained in it. The petroleum from the trap is again fed by pump *11* for dehydration.

4.3.3. Electrical Desalting

In thermochemical dehydration, the water content in petroleum drops to 0.5-1.0%, and simultaneously a considerable part of the salts is removed. Most petroleums, however, require the additional removal of water and salts. This is done by the electrothermochemical method that combines thermochemical settling and treatment of the emulsion in an electric field. Plants for the electrothermochemical removal of water and salts from petroleum, called electrical desalting plants (ELDP) are erected both at fields and at refineries. At present virtually all Soviet refineries have such plants. At many refineries, the electrical desalting plants are blocked with the facilities for the primary distillation of the petroleum and are a constituent part of them.

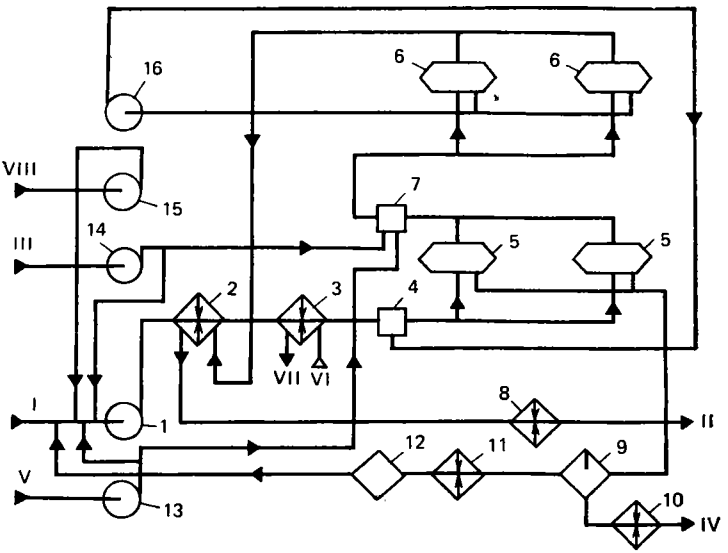

Fig. 9. Diagram of plant for the electrical desalting of petroleum:
1, 13-16—pumps; *2*—heat exchanger; *3*—steam heater; *4, 7*—mixers; *5, 6*—electrical dehydrators; *8, 10, 11*—coolers; *9*—petroleum separator; *12*—tank; *I*—crude petroleum; *II*—desalted petroleum; *III*—demulsifier; *IV*—brine; *V*—fresh water; *VI*—steam; *VII*—condensate; *VIII*—soda-alkali solution

Flow Diagram. A schematic flow diagram of a separately erected electrical desalting plant is shown in Fig. 9. Petroleum is piped from the feed stock tanks of the refinery to the intake of pump *1*. A demulsifier and a weak soda-alkaline solution to prevent corrosion of the equipment are also fed into the intake line of this pump. The mixture of petroleum with the demulsifier and soda-alkaline solution is pumped through exchanger *2*, where it is heated by the desalted petroleum flowing out. Next the crude petroleum is additionally heated in steam heater *3* and is fed into adjustable mixer *4* in which water is added to the petroleum. The resulting artificial water-petroleum emulsion is fed into first-stage electrical dehydrator *5* in which an electric current destroys the emulsion, and the main mass of water and salts is separated from the petroleum (their content is lowered from eight to ten times). From dehydrator *5*, the petroleum flows into second-stage electrical dehydrator *6* for repeated processing. Water is again introduced into the petroleum before dehydrator *6*.

The desalted petroleum flows from dehydrator *6* through exchanger *2*, cooler *8*, and is fed into the desalted petroleum tanks. The water separated in the electrical dehydrators is directed into petroleum separator *9* for additional settling. The trapped petroleum is re-

turned via tank *12* to the feed pump intake, while the water after being cooled is discharged into the sewerage and flows to purification facilities.

Technological Parameters. The temperature and pressure of a desalting process are determined by the properties of the feed stock. Light petroleums with a low viscosity that do not form stable emulsions are desalted at 80-100 °C, but for a number of petroleums such as those from the Romashkino, Arlan, and Mangyshlak fields, a temperature of 130-140 °C is considered to be optimal. One must never forget that elevation of the desalting temperature increases the electrical conductance and the current, and introduces complications into operation of the insulators.

It is very important to feed the demulsifier uniformly into the petroleum. The consumption of demulsifiers ranges from 10 to 30 g/tonne and depends on the stability of the formed water and petroleum emulsion. Demulsifiers are marketed in the form of concentrated solutions in organic solvents from which 1-5% aqueous solutions are prepared before their use.

An alkali is introduced into petroleum to suppress corrosion caused by free hydrogen sulphide, and also to neutralize the inorganic acids that get into the petroleum during the acid treatment of the wells. Fresh river water, steam condensate, and water from the circulation water supply systems are used for washing purposes.

The experience gained in the operation of electrical desalting plants reveals that up to 10-15% of washing water has to be added to petroleum for deep desalting. This is attended by the formation of the same amount of sewage, which after multiple-stage purification is discharged into a water basin. To diminish the consumption of fresh water and lower the discharge of sewage into water basins, many refineries have introduced layouts with return of the washing water from the second desalting stage to the first one, and with the return and recirculation of the water within each desalting stage. The latter variant makes it possible to reduce the consumption of fresh water as a whole in a plant up to 2.5%.

At some refineries where fresh water is in short supply, plants for the thermal desalting of the sewage are erected. In these plants the salty sewage from the electrical desalting plant is evaporated until a dry salt residue is obtained. The condensate is recycled to the process.

Below are given the technological parameters of a plant for desalting a mixture of Romashkino and West-Siberian petroleums:

Petroleum heating temperature, °C	130-140
Pressure in electrical dehydrators, MPa:	
first stage	1.6
second stage	1.2
Voltage in interelectrode space, kV	33

Consumption of washing water, %:	
in first stage	up to 5
in second stage	up to 3
Water content in petroleum, %:	
before electrical desalting plant (ELDP)	1.0
after ELDP	0.10-0.15
Content of salts, mg/litre:	
before ELDP	up to 1800
after ELDP	up to 5

Main Equipment of Electrical Desalting Plants. The main units of a plant are electrical dehydrators, heat exchangers, and tanks for reagent storage. An electrical dehydrator is a tank provided with electrodes which a high-voltage alternating current is supplied to. Spherical and horizontal electrical dehydrators are the most popular at field and refinery desalting plants.

A spherical dehydrator (Fig. 10) has a volume of 600 m³ and a diameter of 10.5 m. Its capacity is 300-500 m³/h. The dehydrator is provided with three pairs of electrodes. The centre of each electrode accommodates a distributing head from which the petroleum enters the interelectrode space horizontally. A special connection of the transformer primary windings makes it possible to obtain a voltage from 22 to 44 kV in an interelectrode space.

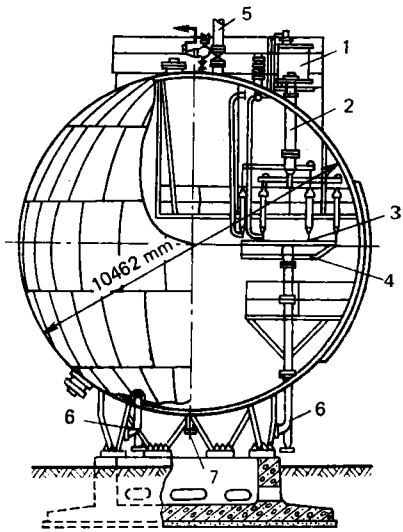

Fig. 10. Spherical electrical dehydrator:

1—transformer; *2*, *4*—distributing heads; *3*—electrode; *5*—connection for discharging desalted petroleum; *6*—connection for feeding in crude petroleum; *7*—connection for drainage

Spherical electrical dehydrators occupy a lot of space, and a large amount of steel is needed for their fabrication. Horizontal electrical dehydrators are more economical and efficient. They are being installed at all electrical desalting plants being erected at present in the USSR. The specifications of various models of horizontal electrical dehydrators are given below:

Model	ЭГ 50-2	ЭГ-160	ЭГ-160/3	ЭГ-200-2Р
Volume, m³	50	160	160	200
Capacity, m³/h	130	350	320	550
Internal diameter, mm	3400	3400	3400	3400
Rated pressure, MPa	1.8	1.8	1.8	1.8
Rated temperature, °C	160	160	160	160

The model 2ЭГ-160 dehydrator has one inlet for the feed stock, while the models 2ЭГ-160/3 and 2ЭГ-200-2Р have two inlets.

In dehydrators with one feed stock inlet (Fig. 11), the water-petroleum emulsion is fed in through a horizontal header arranged along the entire unit. After entering, the petroleum gets into a layer of settled water, next into the zone under the electrodes, into the interelectrode space, and, finally, into the zone above the electrodes. The upper part of the dehydrator accommodates the discharge headers for the treated petroleum.

In units with two inlets, the feed stock is fed in partly into the space under the electrodes and partly between them. Figure 12 is

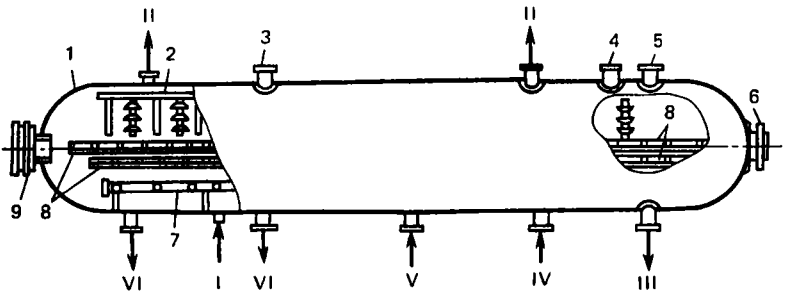

Fig. 11. Horizontal electrical dehydrator 2ЭГ-160:

1—body; *2*—header for desalted petroleum; *3*—connection for safety valve; *4,5*—connections for partition insulators; *6*, *9*—manholes; *7*—header for crude petroleum; *8*—electrode; *I*—crude petroleum; *II*—desalted petroleum; *III*—sludge; *IV*—steam; *V*—washing water; *VI*—brine

a cross section of an electrical dehydrator with two feed stock inlets. The petroleum from common header *1* flows both into horizontal distributors *2* provided with eight openings and into vertical outlets *3* terminating in the space between the lower and middle electrodes in slotted heads *7*. The desalted petroleum is discharged via outlets *8* and header *9*, while the brine is discharged from the lower part of the dehydrator via header *10*. The ratio between the streams of petroleum fed under the lower electrode and into the interelectrode space is determined experimentally depending on the quality of the petroleum.

Merits of the horizontal electrical dehydrators are the larger path of the petroleum, and an increased residence time in the units because the feed stock inlet is lower than in units of other designs. The petroleum settling conditions are considerably improved here.

Moreover, in a horizontal dehydrator with the petroleum fed in under the bottom electrode, the petroleum interacts with the layer of settled brine, and the large particles of water separate even before the petroleum gets into the electric field between the electrodes.

Safety Precautions. The attendants of electrical desalting plants have to deal with equipment in which a high voltage of the electric current is maintained. This creates an increased hazard of these plants. The top platform on the electrical dehydrators accommodating the transformers and reactive coils is provided with screen guards. The staircase providing access onto the electrical dehydrator has a blocking device that switches off the main power supply circuit when the staircase doors are opened. Each of these units is outfitted with a device for switching off the voltage when the petroleum level in the dehydrator drops.

The equipment installed on the top platform and inside an electrical dehydrator may be repaired only after the power supply circuit has been switched off and the premises housing the dehydrators (if they are installed in a building) have been thoroughly ventilated.

If a fire breaks out on the electrical equipment, the current must be switched off immediately.

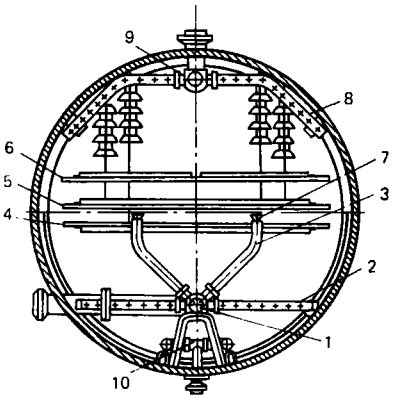

Fig. 12. Cross section of an electrical dehydrator with two feed stock inlets: *1*—header; *2*—distributor; *3*—vertical outlet; *4-6*—electrodes; *7*—slotted head; *8*—outlet; *9*—petroleum header; *10*—water header

Economical Efficiency of Petroleum Desalting and Dehydration. Lowering of the salt content in a petroleum to be refined from 8-14 to 3 mg/litre makes it possible not only to increase the operation of primary distillation plants between repairs from 1-2 to 3-5 years, but also to prolong the operation of the secondary processing plants between repairs and diminish the consumption of fuel, reagents, and catalysts. Lowering of the chloride content in petroleum by only 1 mg/litre yields a saving of 1.1 kopecks per tonne of petroleum processed only at the primary distillation plants.

4.4. Sorting and Mixing

Petroleums of different deposits differ in their chemical composition and commercial properties. High-octane gasoline can be produced from some petroleums without any additional processing, while other petroleums, in particular the Mangyshlak ones, contain a large amount of paraffin waxes, which are a valuable petrochemical raw material.

How petroleum is to be processed at a refinery and the choice of an

appropriate flow sheet (technology) depend on the quality of the feed stock. For example, when processing sour (sulphur-bearing) petroleums, the refinery must include plants for removing sulphur from the products, while dewaxing units have to be installed when processing paraffinic petroleums.

However, it is not rational to supply petroleums separately depending on their grades because this makes the petroleum field facilities more complicated, increases the size of the tank farm, and leads to the setting up of an involved system of pipelines. This is why in practice petroleums are mixed in the regions where they are extracted and are delivered for refining in the form of mixtures.

It is good practice to mix petroleum after studying their properties in detail. Otherwise the product may lose its value. For example, if sour and low-sulphur (sweet) petroleums are mixed, low-sulphur petroleum coke cannot be produced, and it is a product in especially short supply.

Chapter 5

PRIMARY PETROLEUM PROCESSING

5.1. Purpose

Petroleum, as we have already indicated, is an exceedingly complex mixture of mutually soluble organic substances. It is practically impossible to divide it completely into its components, but this is not required for the industrial application of petroleum products. In practice, petroleum is divided into fractions and groups of hydrocarbons that are processed to change their chemical composition. Primary and secondary petroleum treatment processes are employed. The former include processes in which a petroleum is divided into fractions differing in their boiling range, while the latter include processes of thermal and thermocatalytic treatment, and also the purification of the petroleum products.

The fundamental processes of petroleum treatment are primary or straight distillation and rectification.

Distillation. Distillation is defined to be a process of separation of a mixture of mutually soluble liquids into fractions that differ in their boiling points both from one another and from the initial mixture. In distillation, a mixture is heated until it boils and partially evaporates. The vapour is tapped off and condensed. Distillation yields a distillate and a residue. Their compositions differ from that of the initial mixture.

Distillation can be performed by flash, multiple-effect, or batch vaporization.

In flash vaporization, the formed vapour is not removed from the system and remains in contact with the liquid during the entire time of heating the feed stock to a definite final temperature. After the supply of heat has been terminated, the entire vapour-liquid mixture is discharged into a separator where the formed vapour is separated from the liquid in a single operation.

In multiple-effect (or successive-flash) vaporization, the phases are separated during several operations. Multiple-effect vaporization consists of flash vaporizations repeated several times. Initially the vapour is separated from the liquid, and then, in the second stage, the liquid phase remaining after separation of the vapour in the first stage is again evaporated, and so on.

In batch vaporization, the vapour formed is continuously removed from the still. Batch evaporation is used in the laboratory distillation of petroleum from a flask, while in the industry it was previously used in distillation in stills.

A flash vaporization process has advantages over its batch counterpart. In flash vaporization, the low-boiling fractions after vaporization remain in the apparatus and lower the partial pressure of the evaporating high-boiling fractions, which makes it possible to conduct distillation at lower temperatures.

In batch distillation, conversely, the light fractions are distilled off first, and the heavy ones at the end. Hence the light fractions, which evaporated and were removed from the apparatus, no longer affect the boiling point of the heavy ones. Owing to the influence of the light fractions when using flash vaporization, the end boiling point of the feed stock can be lowered by 50-100 °C in comparison with batch vaporization.

In modern plants, petroleum is distilled by employing flash vaporization.

Petroleum is known to contain hydrocarbons boiling at atmospheric pressure within the range of 400-500 °C and higher, whereas the relevant hydrocarbons retain their thermal stability only up to 380-400 °C. At higher temperatures, a decomposition process begins—the cracking of the hydrocarbons, the highest-boiling hydrocarbons of petroleum having the smallest thermal stability.

To prevent the decomposition of the hydrocarbons, their boiling point has to be lowered. This is achieved by vacuum distillation. The petroleum fraction boiling out at atmospheric pressure within the range of 450-500 °C can be distilled in vacuum (a residual pressure of 3-5 kPa) at 200-250 °C.

The boiling point is also lowered in refinery practice by distillation with steam, which lowers the partial pressure of the hydrocarbons.

Rectification. The flash vaporization of mutually soluble liquids and the subsequent condensation of the vapour yield two fractions:

a light one containing more low-boiling fractions, and a heavy one containing less low-boiling fractions than the feed stock. Consequently, in distillation, one phase becomes rich in low-boiling, and the other, in high-boiling components. Distillation does not make it possible, however, to achieve the required separation of the feed stock components and obtain products boiling within the given range. Therefore, flash vaporization is followed by rectification of the petroleum fractions.

Rectification is defined as a diffusion process of separating liquids having different boiling points by the counterflow multifold contacting of the vapour and liquid.

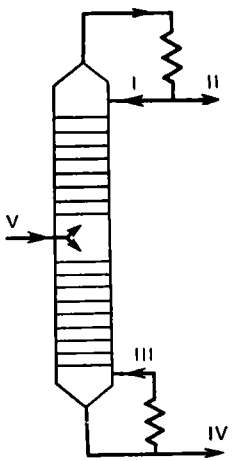

Fig. 13. Rectification column:
I—cold spraying; *II*—rectificate; *III*—circulating hot stream; *IV*—residue; *V*—feed stock

Contacting is performed in vertical cylindrical apparatus—rectification columns provided with special devices—rectification plates or packing—intended to create a close contact between the vapour rising in the column and the liquid flowing down it (Fig. 13).

The feed stock to be divided into its high-boiling and low-boiling parts is fed into the middle part of the column in the form of a vapour, liquid, or vapour-liquid mixture. The section into which the feed stock is supplied is called the **vaporizer section** because flash vaporization of the stock mixture heated in a furnace or heat exchanger occurs in it. In some plants, the vaporizer section is separated from the column, and vaporization occurs in an independent apparatus. In most columns, however, in particular in primary processing plants, flash vaporization and rectification are combined in one unit.

In an operating rectification column, four streams flow through each plate: (1) liquid-reflux flowing down from a higher plate; (2) vapour rising from a lower plate; (3) liquid-reflux flowing onto a lower plate; and (4) vapour rising to a higher plate.

The vapour and liquid flowing onto a plate are not in equilibrium, but when they come into contact, they tend to reach it. The liquid stream from a higher plate enters a zone with a higher temperature, and therefore a certain amount of a low-boiling component evaporates from it, thus lowering the concentration of this component in the liquid. On the other hand, the vapour stream rising from a lower

plate gets into a zone with a lower temperature and a part of the high-boiling component from this stream condenses and passes into the liquid. The concentration of the high-boiling component in the vapour thus diminishes, and of the low-boiling one grows. The fractional composition of the vapour and liquid continuously changes along the height of the column.

The part of a rectification column above the feed stock inlet is called the **rectifying** or **concentrator section**, and below it, the **exhausting** or **stripping** section. The same rectification process occurs in both sections. A target product of the required purity—the rectificate (overhead product) is discharged from the top of the concentrator section in the vapour phase, while a liquid still noticeably enriched with the low-boiling component flows out of the bottom part of the concentrator section. The low-boiling component is finally distilled from this liquid in the stripping section. The second target product—the **residue** (bottom product) is discharged from the bottom of this column section in the form of a liquid.

The rectification process in a column requires the provision of an ascending stream of vapour and a descending one of liquid. The former is produced at the expense of the heat supplied to the stripping section, and the latter at the expense of the spray fed into the concentrator section.

Single (complete and incomplete) and composite rectification columns are distinguished. Figure 13 shows a schematic view of a complete single column consisting of a concentrator and stripping sections and having two product outlets—top and bottom. To separate small amounts of high-boiling and low-boiling fractions, incomplete rectification columns are employed—concentrators and stripping ones. In the former, the feed stock is supplied into the vapour phase under the bottom plate, and in a stripping column into the liquid phase on the top plate.

When it is necessary to divide multicomponent mixtures into several individual components or fractions differing in precise boiling ranges, a multiple-column system is used. To produce n components, $n - 1$ single columns are needed. Such rectification systems are employed in plants for the secondary fractionation of gasoline, gas fractionation, etc.

If the requirements which the purity of the products must meet are not very stringent, composite columns are used. The latter is a column with several feed stock inlets or side stripping outlets along its height. A composite column combines, as it were, several single columns (Fig. 14). To simplify the design, one apparatus combines only the concentrator sections of the columns, while the stripping sections (except for the stripping section of the bottom column) are designed as independent ones.

The products are withdrawn from the bottom of the stripping

sections, while the stripped light fractions are removed into the main column from whose top the lightest distillate is withdrawn.

Types of Primary Distillation Plants. At present, the primary distillation of petroleum is performed in pipe stills. When petroleum is distilled in pipe stills operating at atmospheric pressure, light-end products are separated from it. They include the gasoline, kerosene, and diesel (gas oil) fractions. The residue in these plants is fuel oil (a product with an initial boiling point of 300-360 °C). When it is desired to obtain the maximum amount of fuel oil at a refinery, the petroleum is distilled only at atmospheric pressure. When crude petroleum is in short supply, such a way of refining is not rational.

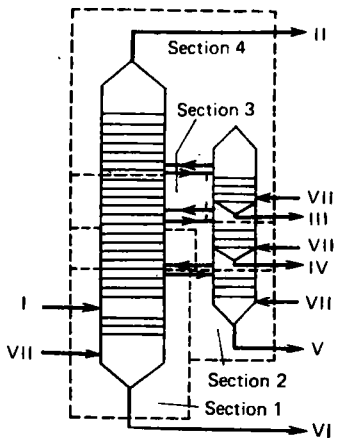

Fig. 14. Composite rectification side-stripping column:
I—feed stock; *II*—rectification; *III-V*—side fractions; *VI*—residue; *VII*—steam

To obtain a larger amount of light-end products than was originally contained in a petroleum, the fuel oil is subjected to deep chemical treatment with the employment of various thermal and catalytic processes. The customary diagram of the deep treatment of fuel oil provides for its preliminary separation into distillate fractions and a highly viscous residue with an initial boiling point of 490-520 °C—tar. Fractionation is performed at a residual pressure of 5-8 kPa in vacuum tubular plants. The distillate fractions and tar are directed for further treatment in separate streams.

Distillation up to tar is performed when the production of petroleum oils, coke, and asphalt has been organized at the refinery.

At most refineries, the atmospheric distillation of the petroleum and the vacuum distillation of the fuel oil are performed in one plant. Such combined plants are called atmospheric-vacuum pipe stills.

Products of Primary Distillation. The following products form as a result of the primary distillation of petroleum at atmospheric pressure.

1. *Liquefied hydrocarbon gas* (*stabilizer overhead*) mainly consisting of propane and butane. The quantity of the product depends on how far the petroleum was stabilized at the field plants. After purification from sulphurous compounds, the gas can be used as a domestic fuel, and as the feed stock for gas plants.

2. *Gasoline fraction.* It is distilled within the range of 30-180 °C. It is used as the feed stock for catalytic reforming plants, and sometimes is directly delivered for use as motor gasoline.

3. *Kerosene fraction.* Its boiling range is 120-315 °C. It is used as fuel for air-jet engines, for illumination, and as the fuel for tractor carburettor engines. It is additionally treated at hydrofining, alkaline treatment, or mercaptan-removing plants to eliminate the sulphurous compounds and improve the service properties.

4. *Diesel fraction.* Its boiling range is 180-350 °C. This fraction was previously called atmospheric gas oil or solar oil. It is employed as fuel for the diesel engines mounted on motor vehicles including tractors, on diesel locomotives, marine and river vessels. When necessary, it is purified of sulpur with the aid of the hydrogenization method (see Sec. 7.12).

5. *Fuel oil* is the residue of the atmospheric distillation of petroleum. It is used as an industrial fuel and is the feed stock for thermal cracking plants.

The assortment of products obtained in the vacuum distillation of fuel oil depends on the variant employed to process the petroleum. Two fuel oil treatment schemes exist, namely, the lubricating oil and the fuel ones.

In the lubricating oil scheme of fuel oil processing, two or three distillate fractions are obtained, and each of them is then purified (see Chap. 10). The purified products are blended in various proportions to produce the relevant grades of base oils.

In the fuel scheme, one fraction is generally separated that is distilled at 350-500 °C. It is used as the feed stock for catalytic cracking or hydrocracking. This fraction is sometimes called vacuum gas oil.

6. *Tar* (residual stock) is the residue of the vacuum distillation of fuel oil. It is used as the feed stock for thermal cracking, viscosity breaking, and coking plants, and in the production of asphalt and lubricating oils.

5.2. Flow Diagrams of Petroleum Primary Distillation Plants

Atmospheric pipe stills, depending on their flow diagrams, are divided into single-flash and double-flash (double-effect) ones.

In a *single-flash still* (Fig. 15*a*), the petroleum is fed in via heat exchangers and a pipe furnace to a rectification column in whose vaporizer section flash vaporization occurs. Next, in the concentrator part of the column, the vapour by rectification is divided into the target fractions, while in the stripping section the low-boiling fractions are withdrawn from the liquid phase, also by rectification.

In a *double-flash still* (Fig. 15*b*), the petroleum heated in heat exchangers is fed into the **topping** column. The petroleum evaporates

in the vaporizer section of this column. Since the petroleum is heated only to 200-240 °C, a small amount of vapour forms, and it mainly contains gasoline fractions. On the rectification plates of the concentrator section, the gasoline is separated from the heavier fractions and leaves the column in the form of a vapour. The vapour of the water, fed into the still together with the petroleum, and gases are removed together with the gasoline vapour.

The semi-stripped petroleum from the bottom of the column is fed via a pipe furnace into the main, **atmospheric** column, where

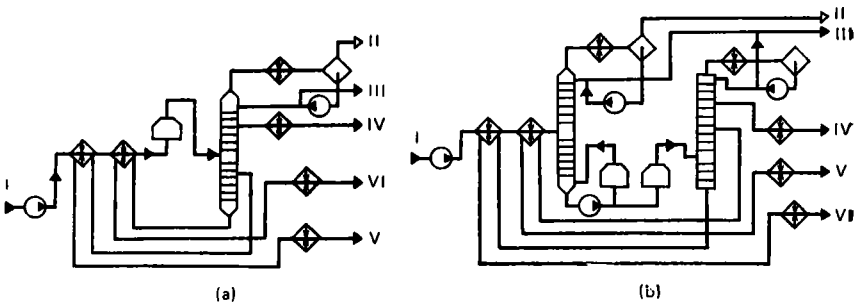

Fig. 15. Atmospheric flash (*a*) and double-effect (*b*) distillation:
I—petroleum; *II*—gas; *III*—gasoline; *IV*—kerosene; *V*—diesel fraction; *VI*—fuel oil

repeated evaporation of the petroleum and rectification of the vapour with the separation of heavy gasoline, the kerosene and diesel fractions are performed. The residue is fuel oil.

A merit of a single-flash still is that the light and heavy fractions are evaporated together. This promotes the deeper separation of the heavy components at the relatively low temperatures which the petroleum is heated to. Single-flash stills are compact, have a low pipeline length, and require less fuel than other plants.

When petroleums with an increased (above 15%) content of gasoline fractions are distilled in units of this type, however, the pressure in the heat exchangers and tubes of the furnace coil substantially increases. This makes it necessary to employ stronger equipment containing more metal, and increase the pressure in the delivery line of the feed stock pump. Moreover, if water and salts have been removed poorly from the feed stock, this leads to an increase in the pressure in the furnace and the deposition of salts in the coil tubes, which may cause an accident—burning out of the tubes.

In double-flash stills, the gas, water, and a considerable part of the gasoline are removed from the petroleum before it is fed into the furnace. This facilitates the conditions of operation of both the furnace and the main rectification column and is the main advantage

of double-flash stills. The latter are especially convenient when the kind of petroleum being processed changes quite frequently.

At the same time, to achieve the same depth of withdrawing the distillates as in single-flash operation, the petroleum has to be heated to a higher temperature (360-370 °C) in double-flash stills. The number of rectification columns and feed stock pumps grows in the latter, and the size of the condensation apparatus increases.

In vacuum distillation plants and units handling fuel oil, single-flash units (Fig. 16*a*) are more popular. Experience gained in their

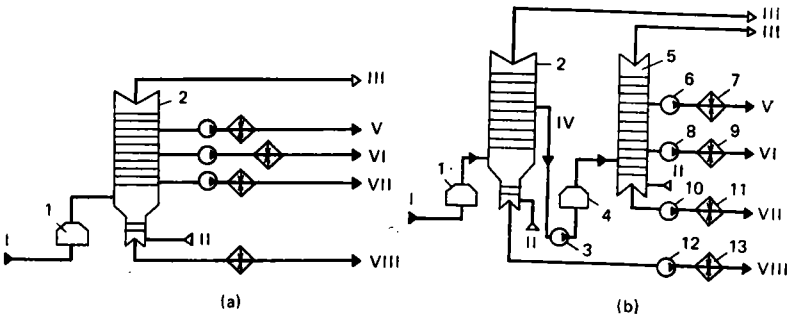

Fig. 16. Vacuum flash (*a*) and double-effect (*b*) distillation of fuel oil:
1, 4—furnaces; *2,5*—vacuum columns; *3, 6, 8, 10, 12*—pumps; *7, 9, 11, 13*—heat exchangers; *I*—fuel oil; *II*—steam; *III*—vapour from top of vacuum columns; *IV*—vacuum distillate (350-500 °C fraction); *V-VII*—oil fractions; *VIII*—tar

operation has shown, however, that these units do not yield well rectified vacuum distillates with a precise distillation range needed for the production of high-grade oils. The average overlap of the boiling points of adjacent vacuum distillates is 70-130 °C.

The precision of vacuum distillates can be improved by increasing the number of rectification plates. Such a solution is not always acceptable, however, because an increase in the number of plates in a column is attended by lowering of the vacuum and rising of the temperature on the bottom plates; the depth of stripping may diminish, and the quality of the distillates become poorer. Another way of improving the quality of vacuum distillates is the use of double-flash stills (Fig. 16*b*). This arrangement provides for the withdrawal of a wide oil fraction in the first vacuum column. After being heated in a furnace, this fraction is broken up into fractions with a narrower boiling range in the second column.

In two-stage vacuum distillation, additional amounts of fuel, steam, and electrical energy are required. But this outlay is compensated by the improvement in the quality of the oil distillates, and, in the long run, of commercial oils. The average overlap of the boiling points lowers to 30-60 °C.

Flow Diagrams. Refineries employ all the above schemes of distilling petroleum and fuel oil, separate atmospheric and vacuum distillation plants are erected, as well as combined atmospheric-vacuum pipe stills. Up to the 1950's, atmospheric and atmospheric-vacuum stills with a capacity of 0.5-0.6 million tonnes a year were erected in the USSR. The following years saw the appearance of plants with a capacity of 1-3 million tonnes. Beginning from 1967, powerful petroleum distillation plants handling from six to eight million tonnes of petroleum a year are the rule in construction. At many plants erected during the last 20-25 years, the primary distilla-

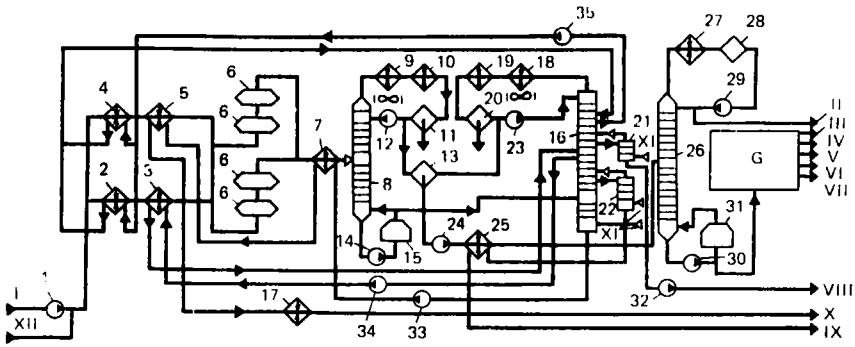

Fig. 17. Flow diagram of a combined primary petroleum distillation plant ЭЛОУ-АТ-6:

1, 12, 14, 23, 24, 29, 30, 32-35—pumps; *2-5, 7, 25*—heat exchangers; *6*—electrical dehydrators; *8, 16, 21, 22, 26*—columns; *9, 10, 18, 19, 27*—condensers and coolers; *11, 13, 20, 28*—tanks; *15, 31*—pipe furnaces; *17*—cooler; *G*—secondary gasoline distillation unit; *I*—petroleum; *II*—stabilizer overhead; *III*—fractions with initial boiling point of 62 °C; *IV*—62-85 °C fraction; *V*—85-105 °C fraction; *VI*—105-140 °C fraction; *VII*—140-180 °C fraction; *VIII*—180-230 °C fraction; *IX*—230-350 °C fraction; *X* —fraction above 350 °C; *XI*—steam; *XII*—demulsifier

tion of petroleum is combined with the desalting of the feed stock, the stabilization and the secondary distillation of gasoline.

Figure 17 presents a flow diagram of a combined primary petroleum distillation plant ЭЛОУ-АТ-6 with atmospheric distillation for six million tonnes a year designed by the VNIPINeft' Institute. It employs double-effect vaporization. The crude petroleum is delivered by pump *1* through exchangers *2-5*, the bank of electrical dehydrators *6* and exchangers *7* into topping column *8*. The overhead product of column *8*—a light gasoline fraction—is cooled in air and water coolers *9* and *10*. It is then fed into reflux tank *11*. Part of the gasoline is recycled from tank *11* by pump *12* into column *8* as a reflux, while the remaining part flows into tank *13* under its own pressure.

The bottom product from column *8*—partly topped petroleum—is delivered by pump *14* into pipe furnace *15*. Two streams of petroleum

heated to 360 °C emerge from the furnace. One of them is returned to column *8* and introduces an additional amount of heat needed for rectification, while the second stream flows into atmospheric column *16*. In this column, the feed stock is divided into several fractions.

To lower the temperature at the bottom of the column and extract the light-end products more completely from the fuel oil, rectification in column *16* is performed in the presence of steam. The latter is fed into the bottom part of the column. The fuel oil is discharged from the bottom of column *16* and via feed stock heating exchangers *7* and *5* and cooler *17* is removed from the plant.

The vapour of the gasoline fraction with an end boiling point of 180 °C, and also steam flow out of the top of column *16*. The vapour and steam flow into air and water condensers and coolers *18* and *19*, and after condensation the product enters water-separator tank *20*. The heavy gasoline after settling to remove water is fed into tank *13*. Part of the gasoline from tank *20* is recycled to column *16* as a direct (open) reflux.

Two side-cut distillates—kerosene (180-230 °C) and diesel (230-350 °C) ones are removed from column *16*. These distillates are initially fed into stripping columns *21* and *22*. Here the light-end fractions are removed from the side-cut distillates in the presence of steam. The target products freed of the light-end fractions are discharged from the plant via the heat exchangers and coolers, while the vapour of the light-end fractions is recycled into column *16*.

To improve the operating conditions in column *16* and withdraw the excess heat, provision has been made for the tapping of two circulating refluxes—a top and bottom ones. They are taken in by pumps, are fed through feed stock heating exchangers *2-4*, and are then recycled to column *16* onto the plate over the one from which the reflux was withdrawn.

The IBC-180 °C gasoline fraction is delivered by pump *24* from tank *13* into exchanger *25*, where it is heated by the 230-350 °C fraction to 170 °C, and is then fed into stabilizer column *26*. The overhead of column *26*—the stabilizer overhead—is removed into condenser and cooler *27*. From the latter, the condensate flows into tank *28*. Part of the overhead fraction is returned from tank *28* into column *26* as a reflux, while the remaining part is withdrawn from the plant. The bottom fraction of column *26*—a stable gasoline fraction with an initial boiling point of 180 °C—flows into the secondary gasoline distillation unit, where it is separated into narrow fractions (see Sec. 5.10). To maintain the required thermal regime in column *26*, part of the stable gasoline fraction is pumped through furnace *31*, where it is vaporized, and is recycled in the vapour phase to column *26*.

An atmospheric-vacuum pipe-still plant ЭЛОУ-АВТ-6 (Fig. 18) intended for the processing of sour petroleums has been erected at several refineries of the USSR.

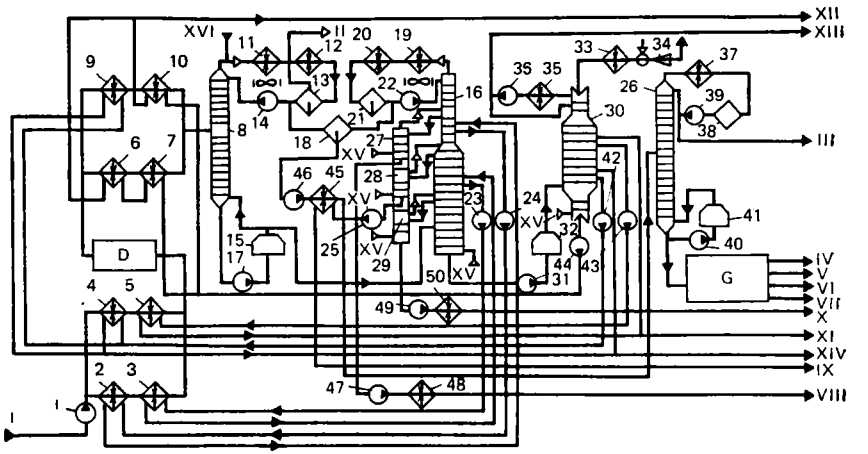

Fig. 18. Flow diagram of atmospheric-vacuum pipe-still plant ЭЛОУ-АВТ-6:
1, 14, 17, 22-25, 31, 36, 39, 40, 42-44, 46, 47, 49—pumps; *2-7, 9, 10, 45*—heat exchangers; *8, 16, 26-30*—columns; *11, 12, 19, 20, 33, 37*—condensers and coolers; *13, 18, 21, 38*—tanks; *15, 32, 41*—pipe furnaces; *34*—ejector; *35, 48, 50*—coolers; *D*—bank of electrical dehydrators; *G*—secondary gasoline distillation unit; *I*—petroleum; *II*—gas; *III*—stabilizer overhead; *IV-VII*—close-cut gasoline fractions; *VIII*—180-230 °C fraction; *IX*—230-280 °C fraction; *X*—280-350 °C fraction; *XI*—350-500 °C fraction; *XII*—tar (fraction above 500 °C); *XIII*—fraction below 350 °C; *XIV*—fraction above 400 °C; *XV*—steam; *XVI*—corrosion inhibitor

The feed stock is taken up by pump *1* and passes through the feedstock heat exchangers in two streams. The first stream is heated at the expense of heat exchange with the overhead (in exchanger *2*) and bottom (in exchanger *3*) circulating refluxes of column *16*. The second stream passes through exchangers *4* and *5* where it is heated by the bottom and middle circulating refluxes of vacuum column *30*. Next both streams of the stock are mixed and delivered into the electrical dehydrators.

The dehydrated and desalted petroleum is again divided into two streams and is fed into heat exchangers. The first stream is heated in exchangers *6* and *7* by the tar, and the second in exchanger *9* by the bottom circulating reflux of column *30* and in exchanger *10* by the tar. Next the feed stock flows into topping column *8*.

Unlike the ЭЛОУ-АТ-6 plant, three side-cut distillates are withdrawn in atmospheric column *16*, namely, a kerosene (180-230 °C), light diesel (230-280 °C), and heavy diesel (280-350 °C) fractions. The provision of three side outlets makes the operation of the plant more flexible and broadens the assortment of diesel fuels produced.

The residue from the atmospheric column—fuel oil—is fed by pump *31* into pipe furnace *32*. The fuel oil heated here to 410 °C is delivered into vacuum column *30* in which a residual pressure of 6.6 kPa is maintained. Steam is introduced into the bottom of

column *30* to lower the temperature there and facilitate the evaporation of the light components from the tar.

Steam, decomposition gases, air, and a small amount of a petroleum product (diesel fraction) emerge from the top of column *30* and flow into condenser *33*. The uncondensed gases are sucked out by multistage ejector *34*.

Provision has been made in column *30* for the withdrawal of three circulating refluxes, namely, the top reflux is tapped from the 15-th plate, is cooled in exchanger *35* for heating the chemically treated water, and is returned onto the 18-th plate. The balance excess (the fraction below 350 °C) is directed into column *16* or into the diesel fuel line. The commercial 350-500 °C fraction (vacuum gas oil) and the middle circulating reflux are withdrawn from the ninth plate. The reflux is recycled to the 11-th plate, while the fraction is withdrawn from the plant via heat exchanger *5*. The bottom circulating reflux is tapped from the fifth plate and is returned after cooling in exchangers *4* and *9* onto the sixth plate. Provision is made for the recycling of the balance excess (the fraction above 400 °C) into column *16*.

The vacuum distillation residue—tar (the fraction above 500 °C) is pumped out of the plant via exchangers *6*, *7*, and *10*.

The flow diagram of the stabilizer and secondary gasoline distillation units of the ЭЛОУ-АВТ-6 plant is similar to that described for the ЭЛОУ-АТ-6 plant.

5.3. Operating Conditions of Atmospheric and Atmospheric-Vacuum Distillation Plants

The technological conditions in primary distillation plants depend on the quality of the feed stock, the assortment of the products, and the features of the flow diagram.

Below are given approximate indices of the technological conditions for an atmospheric-vacuum distillation plant operating on sour petroleum from eastern fields:

Temperature, °C	
feed stock at inlet to electrical dehydrators	130-140
ditto at inlet to topping column	210-230
topped stock before atmospheric column	340-360
fuel oil after vacuum furnace	400-420
in topping column:	
top	130-150
bottom	230-240
in atmospheric column:	
top	120-140
bottom	330-340
in stripping column:	
180-230 °C fractions	180-200
230-280 °C fractions	240-250
280-350 °C fractions	290-300

in stabilizer column:	
top	60-80
bottom	180-200
in vacuum column:	
top	90-110
bottom	340-360
flue gases at passes of furnaces	770-780
Pressure:	
gauge, MPa:	
in topping column	0.4-0.5
in atmospheric column	0.15-0.20
in stabilizer column	0.8-1.4
residual in vacuum column, kPa	5.3-8.0
Consumption of steam:	
into bottom of atmospheric column, % of fuel oil	1.5-2.0
into bottom of vacuum column, % of tar	5.0-8.0

5.4. Material Balance and Product Quality of Atmospheric and Atmospheric-Vacuum Plants

Yield of Distillates. The product yield at straight-distillation plants depends first of all on the properties of the feed stock.

Material Balance. The material balance of atmospheric-vacuum distillation plants when supplied with two types of feed stock—Tatar petroleum of the Romashkino type and West-Siberian petroleum of the Samotlor type (in %) is given below:

	Tatar petroleum	West-Siberian petroleum
Feed		
Petroleum	100.0	100.0
Products		
Hydrocarbon gas	1.0	1.1
Gasoline fraction (IBP-140 °C)	12.2	18.5
Kerosene fraction (140-240 °C)	16.3	17.9
Diesel fraction (240-350 °C)	17.0	20.3
Light oil distillate (350-400 °C)	7.0	8.3
Medium oil distillate (400-450 °C)	8.4	7.5
Heavy oil distillate (450-490 °C)	6.6	5.9
Tar (over 490 °C)	30.8	19.8
Losses	0.7	0.7
Total yield	100.0	100.0

These petroleums can be seen to substantially differ from each other in the yield of the individual fractions. The West-Siberian feed stock yields 50% more gasoline and 20% more of the diesel

fraction. The product yield also depends on the flow diagram of a plant, on how modern it is, and on how efficiently it is operated. At different refineries, and even at the same refinery but in different distillation plants, the same feed stock yields different amounts of commercial products.

An important index of the operation of straight-distillation plants is the withdrawal of the target fractions. The feed stock delivered for distillation contains a certain definite amount of fractions distilled at different temperature ranges, for example, the IBP-350 °C, 350-500 °C fractions, and so on. This amount is called the **potential** of the given fraction. Under industrial conditions, a fraction cannot be extracted from the feed stock completely. The ratio of the amount of a fraction obtained in a plant to the amount contained in the feed stock is called the **extraction-potential ratio** or **extraction factor.**

The target products in the operation of the atmospheric part of a plant are the light-end fractions. In atmospheric plants, everything possible is done to achieve the maximum yield of the light-end fractions without permitting losses of the diesel fractions with the fuel oil and of the gasoline fractions with the gas. Some teams achieve an extraction factor of 0.97-0.98 (97-98%) for the light-end products.

The operation of the vacuum part of an atmospheric-vacuum plant is characterized by the extraction factor of the lubricating oil fractions. The main task here is to prevent the oil distillate fractions from getting into the tar.

Distillate Quality. The quality of distillates is determined by the intershop standards. The latter are compiled with account taken of the requirements of the state standards and the specifications in force in the petroleum and consumer industries.

An important quality index of distillates are the initial and end (final) boiling points. Thus, the end boiling point (EBP) of the gasoline fraction must not exceed 180 °C. This is associated with the need to prevent coke formation on the reforming catalysts, and also with the requirements of the standard for motor gasoline.

The temperature at which freezing (crystallization) begins and the viscosity are the determining characteristics of the kerosene fraction, while the flash and pour points are the characteristics of the diesel fraction. For the viscosity and temperature quality indices of distillates to correspond to the standards, it is necessary to achieve the withdrawal of distillates of a definite fractional composition in the distillation plants. If the quality of the feed stock changes, this is often attended by a change in the distillate boiling range.

In addition to the extraction factor mentioned above, the operation of straight-distillation plants is appraised by the **fraction overlap,** i.e. the difference between the end boiling point of a low-boiling fraction and the initial boiling point of a high-boiling one. A fraction

overlap of not more than 10-15 °C in the distillates of an atmospheric column is considered to be satisfactory. Another index of distillation plant operation is the content of light-end distillate fractions in the residue of an atmospheric column. At some atmospheric and atmospheric-vacuum plants, the diesel fraction content in the fuel oil does not exceed 3-5%.

5.5. Basic Equipment of Primary Petroleum Distillation Plants

A variety of apparatus and equipment is used in primary petroleum distillation plants. They include rectification columns, pipe furnaces, heat exchangers, and tanks.

Rectification Columns. The rectification columns employed at petroleum refineries are classified according to their technological designation, pressure, way of contacting the vapour and liquid, and to the number of products obtained in the separation of a mixture. Depending on its designation, rectification equipment is divided into columns for the atmospheric distillation of petroleum, topping columns, columns for the vacuum distillation of fuel oil, stabilizer columns, and so on. Depending on the pressure, atmospheric, vacuum, and pressure columns are distinguished. With respect to how contact is achieved, plate (tray) and packed columns are distinguished. Most technological petroleum processing plants use only plate columns.

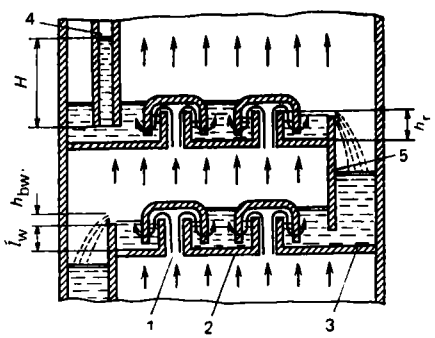

Fig. 19. Operation of a bubble-cap plate:

1—riser (chimney); *2*—cap; *3*—bubble plate; *4*—downcomer; *5*—weir; H = height of liquid in downcomer; h_r = height of riser; h_{bw} = height of backwater when liquid flows down; l_w = height of part of weir or downcomer protruding above plate

The plates of rectification columns are distinguished by the method of transferring the liquid from one plate to another (through perforations and with special downcomers and weirs), by the nature of motion of the liquid and gas phases on a plate, and by the design of the means for introducing the vapours into the liquid (sieve, bubble-cap, valve, etc.). The operation of a bubble-cap plate is shown in Fig. 19. The plate is a disk with numerous openings for the passage of a gas or vapour. Sides are fastened along the perimeters of the openings that form chimneys or risers maintaining a definite layer of liquid on the plate. The risers are covered with bubble caps. A gap is provided between the upper edge of the riser and the cap for the passage of the vapour rising from a lower plate. In operation, the

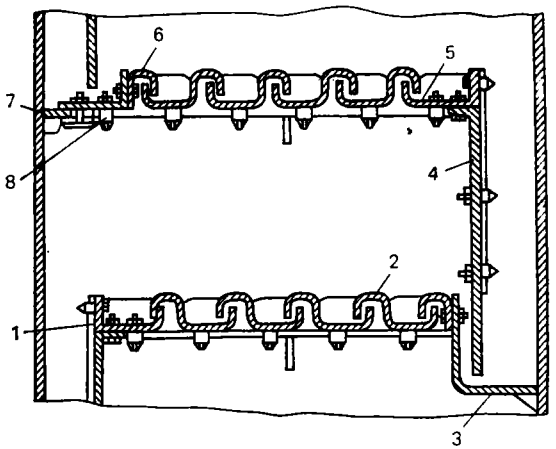

Fig. 20. Plate with S-shaped elements:
1—flat segment; *2*—*S*-shaped element; *3*—pocket; *4*—weir; *5*—first element; *6*—cap; *7*—supporting strip; *8*—screw clamp

bubble-caps are immersed in a layer of liquid and thus form a hydraulic seal through which the vapour is bubbled.

The required level of the liquid on the plates is maintained by weirs whose lower protruding end reaches the next plate. The excess liquid flows over the weirs onto the lower plate. The position of the caps can be adjusted by altering the size of the gap between the cap and the upper edge of the riser.

In plates with S-shaped elements (Fig. 20), the liquid flowing toward the downcomer moves across the caps, while the latter are integral with the troughs. Each S-shaped element consists of a cap and a trough part. In assembly of a plate, both parts are arranged with the cap part of one element covering the trough part of another one, forming a hydraulic seal.

Plates with S-shaped elements are intended for columns operating under atmospheric or a moderate pressure. They are characterized by stable uniform operation when the load changes. The capacity of these plates is 20% higher than that of the grooved ones.

The group of bubble-cap plates includes valve straight-flow ones that in recent years have been employed in most technological plants being erected at refineries, and in particular at primary distillation plants. These plates are especially efficient for columns operating under varying vapour and liquid loads, and also for columns in which it is necessary to achieve an increased separation precision. The main element of such a plate is its valve (Fig. 21) that is lifted by the vapour to a varying height above the plate proper. Unlike bubble-cap plates operating under static conditions, valve plates are characterized by dynamic, variable operating conditions.

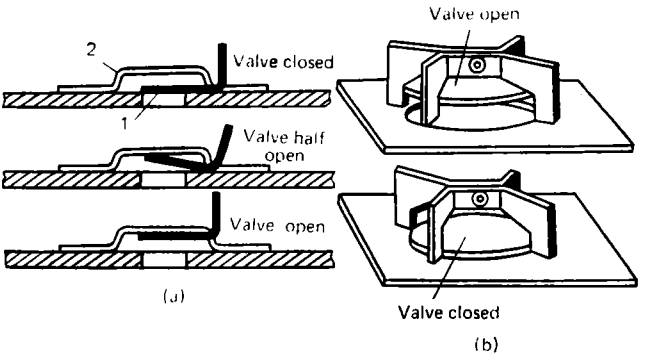

Fig. 21. Valve plate caps:
a—rectangular; *b*—round; *1*—valve; *2*—retainer

The movable valves depending on the vapour load either rise or lower, regulating the area of the free cross section of the plate. Owing to such a design, the velocity of the vapour does not vary substantially within a wide range of loads determined by the possible length of the valve stroke.

Valve ballast plates ensure more efficient separation. On the surface of these plates, there are arranged rectangular valves over which a moving ballast common for all the valves is located. The use of rectangular valves instead of round ones reduces the metal residues in their fabrication by 30%.

Among the capless plates, shower-type grid plates and sieve plates with baffle elements have come into use in recent years. Grid plates are very sensitive to a change in the technological conditions, and this is why they are employed only in columns with stable constant loads. Sieve plates have a low hydraulic resistance and are used in vacuum columns.

Single and composite columns are used at primary petroleum distillation plants. The topping and stabilizer columns are single ones, and the atmospheric and vacuum columns are composite ones. An atmospheric column usually consists of three or four sections, and two or three side distillates are withdrawn in it. From one to three side distillates are withdrawn in vacuum columns. Characteristics of atmospheric-vacuum rectification columns used for straight distillation are given below:

Plant capacity, million tonnes/year	2	6
Topping Column		
Diameter, mm	4200	5000
Number of plates	15	24
Type of plates	Grooved	Valve
Vapour velocity, m/s	0.231	0.266
Height of backwater at weir, mm	26	40

Atmospheric Column		
Diameter, mm	4200	5000/7000
Number of plates	43	43
Type of plates	Grooved	Valve
Velocity of vapour in top cross section, m/s	0.34	0.96
Height of backwater at weir, mm	16	35
Vacuum Column		
Diameter, mm	5000/8000/6000	6400/9000
Number of plates	12	18
Type of plates	Grooved	Valve
Velocity of vapour, m/s	—	2.1-3.5

Ways of Creating Reflux. Three main ways of creating a reflux are employed in the industry: (1) with the use of a surface partial condenser, (2) a cold, evaporating (direct) reflux, and (3) a circulating, non-evaporating reflux.

How refluxes are created in rectification columns is shown schematically in Fig. 22. A partial condenser (see Fig. 22*a*) is a tubular

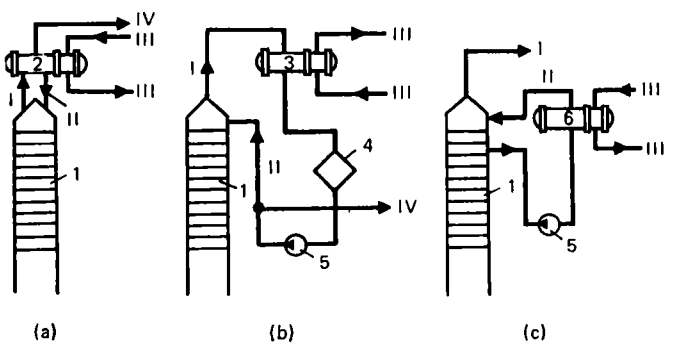

Fig. 22. Reflux of rectification columns:
(*a*) with the use of a partial condenser; (*b*) cold reflux; (*c*) circulation reflux; *1*—column; *2*—partial condenser; *3*—condenser and cooler; *4*—reflux tank; *5*—pump; *6*—heat exchanger (cooler); *I*—vapour from column; *II*—reflux; *III*—coolant (water, air, cold feed stock); *IV*—rectificate

heat exchanger installed directly on a column. Water or the cold feed stock is fed into the tubes of the exchanger. The condensate formed in the intertubular space flows back into the column in the form of a reflux.

When heat is removed by a cold (direct) reflux (Fig. 22*b*), a cold liquid whose composition corresponds to that of the rectificate is pumped to the column top. This liquid comes into contact on the top plate with the vapour rising from the lower plates and evaporates. The rising vapour is cooled and partly condenses. The resulting

condensate flows down onto the following plate in the form of a reflux. The vapours of the reflux and of the product evaporated on the upper plate flow out into condenser and cooler *3*. After condensing, the product is gathered in tank *4* whence it is taken up by pump *5* and partly returned to the column; the remaining part is pumped out of the plant.

A circulating (non-evaporating) reflux (Fig. 22*c*) is employed for removing heat from the top part of a column and from the intermediate sections. Here the heat is removed as follows: the liquid is taken in by pump *5* from a plate, pumped through heat exchanger or cooler *6*, and returned to the column onto a higher plate.

When comparing the various ways of creating a reflux, we must note that the arrangement with a partial condenser is employed only in low-capacity plants. In high-capacity plants, the size of the partial condensers grows, and it becomes difficult to accommodate them above the column. Moreover, complications arise in regulating the temperature of the column because it is impossible to rapidly change the amount of reflux recycled from the partial condenser.

When heat is removed by using a direct reflux, the condensers can be installed at any level, and their operation is much simpler. But the use of this arrangement requires the installation of a special pump for feeding in the reflux and the expenditure of electrical energy.

Modern primary petroleum distillation plants employ combined reflux schemes. Thus, direct (cold) and circulation refluxes are combined in composite atmospheric columns. The mass of the rectificate in the latter when passing from the first (bottom) single column (section) to the top one diminishes, while that of the reflux (if only a direct reflux is fed into the column) should grow in the same sequence. The matter is that such an amount of the reflux must pass through a higher section which will be sufficient not only for the given section, but also for the ones below it. Thus, the higher sections are overloaded with the liquid stream whose magnitude appreciably exceeds the reflux needed for the given section. When a combined scheme is used in the form of a direct reflux, there is introduced only the amount of reflux needed for the top column section. The reflux in the other sections is produced by a circulating one. It is picked up from one of the plates of the relevant section, cooled, and fed onto the top plate of this section. In the atmospheric columns of modern primary distillation plants, the number of circulating refluxes is generally less by unity than the number of withdrawn side-cut distillates.

The use of intermediate circulating refluxes makes it possible to improve the conditions of heat regeneration at primary distillation plants—since the temperature of the refluxes is sufficiently high, they are employed for heating the feed stock. In vacuum columns, the reflux is produced exclusively by circulating ones.

Ways of Lowering the Boiling Points of Petroleum and Its Fractions. To prevent the decomposition of the high-boiling petroleum fractions, it is necessary in distillation to lower the boiling point of these fractions. This is done by lowering the pressure in the rectification columns and feeding in steam.

A vacuum (rarefaction) is produced in columns with the aid of vacuum pumps or steam-jet ejectors that suck out the decomposition gases and the air getting into the apparatus owing to its insufficient tightness.

Vacuum pumps are similar in the principle of their operation to compressors. There are piston, rotary, and water ring vacuum pumps. Steam-jet ejector units (Fig. 23) use the kinetic energy of steam. A jet of steam flows at a high speed out of a nozzle, entrains the gas-liquid mixture being sucked out, and is discharged together with it into the atmosphere. To produce a small vacuum (up to 30 kPa), single-stage ejector units are employed. If a higher vacuum is required, multiple-stage steam-jet ejector units are used that are outfitted with intermediate condensers (see Fig. 23*b*). The working steam and the gases emerging from the preceding stage are cooled in the condensers and condense in them.

The vapour sucked out of vacuum columns is fed into a condensing and cooling apparatus. The condensing of the vapour is shown schematically in Fig. 24. Previously, an arrangement (Fig. 24*a*) was employed in primary processing plants in which a barometric mixing condenser was the main apparatus.

It is a cylindrical apparatus with cascade sieve plates. The vapour from the top of the vacuum column is fed in under the bottom plate. The cooling water is fed onto the top plate. The condensed petroleum vapour and water flow down tube *3* into barometric well *6*, while the gas from the top of the barometric condenser is sucked out by steam-jet ejectors *4* or vacuum pumps. A substantial shortcoming of scheme *a* is that when the cooling water is mixed directly with the petroleum vapour, it becomes highly contaminated with hydrogen sulphide and petroleum products.

In the arrangements employed in modern plants, the danger of contaminating the water has been eliminated. An arrangement with surface condensers (Fig. 24*b*) has become quite popular. Here the vapour from the top of the vacuum column flows into condenser *7*, where the main part of the steam and the carried off petroleum fractions condense. Shell-and-tube heat exchangers with a floating head or air-cooled apparatus are used as the condensers. Next the condensate and vapour are fed into gas separator *8* from which the uncondensed vapour is sucked by the ejectors. The condensate flows down the barometer tube into separator settling tank *9*. The latter also receives the steam condensates from the interstage condensers of the ejector. The water from the settling tank is discharged into the sewerage sys-

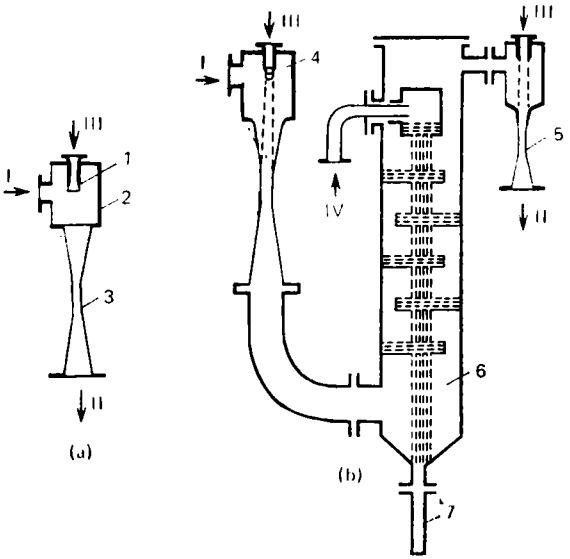

Fig. 23. Steam-jet single-stage (*a*) and double-stage (*b*) ejector units:
1—steam nozzle; *2*—head; *3*—diffuser; *4*—first-stage ejector; *5*—second-stage ejector; *6*—mixture condenser; *7*—barometer tube; *I*—mixture being sucked out; *II*—exhaust; *III*—steam; *IV*—water

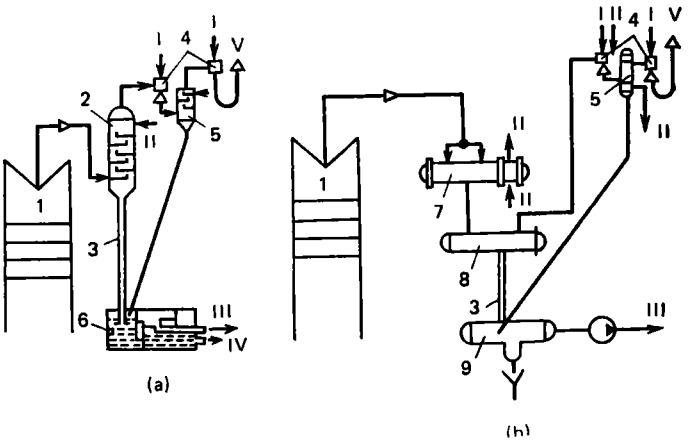

Fig. 24. Condensation of vapour emerging from a vacuum column:
a—with a mixture condenser; *b*—with a surface condenser; *1*—column; *2*—barometric condenser; *3*—barometer tube; *4*—ejectors; *5*—intermediate condenser of steam-jet ejector unit; *6*—barometric well; *7*—surface condenser; *8*—gas separator; *9*—separator settling tank; *I*—steam; *II*—water; *III*—trapped petroleum product; *IV*—water contaminated by petroleum products; *V*—uncondensed gases (ejector exhaust)

tem, while the petroleum product separated from water is recycled into the diesel fraction line. The exhaust gases from the ejector are burned in a pipe furnace.

Modern equipment for creating a vacuum ensures the maintaining of a residual pressure of 5-9 kPa in the columns of atmospheric-vacuum distillation plants.

Lowering of the boiling point by feeding in steam is widely used in the technological equipment of petroleum refineries. In accordance with Dalton's law, the pressure in an apparatus (column) is the sum of the partial pressures of all the substances in it. The introduction of steam lowers the partial pressure of the petroleum vapour and allows the liquid petroleum product to evaporate at a lower temperature. The consumption of steam Z (in per cent of the stock being distilled) is determined by the formula

$$Z = \frac{(760 - p)\,18}{pM} \times 100 \qquad (5.1)$$

where p is the partial pressure of the petroleum product, mmHg, M is the molecular mass of the product, and 18 is the molecular mass of steam.

Primary distillation plants employ ways of lowering the boiling points of the petroleum fractions either by introducing steam (in atmospheric and stripping columns) or by combining a vacuum with the introduction of steam (in a vacuum column).

Pipe Furnaces. These furnaces are intended for heating petroleum and its products up to high (above 200 °C) temperatures at the expense of the heat evolved in the combustion of fuel. In thermal processes, these furnaces often serve as reactors.

Pipe furnaces generally have a radiation and convection chambers. The former houses the burners in which the fuel (gas or fuel oil) is burned and radiant pipes that receive the radiated heat. The combustion (flue) gases flow from the radiation chamber into the convection one. The latter houses convection pipes or tubes receiving the heat of the flue gases emerging from the radiation chamber with a temperature up to 950 °C. The cooled flue gases are directed into the chimney via a gas collector.

Pipe furnaces are classified by the following features: (1) the net calorific power; (2) the capacity, i.e. the amount of a substance heated in unit time; (3) the technological application; and (4) design features.

The net calorific power of furnaces—the amount of heat received by a substance—ranges at refineries from 0.6-0.9 MW (500-800 Mcal/h) to 70-120 MW (60-100 Gcal/h). Modern primary petroleum processing plants have pipe furnaces with a net calorific power of 20, 40, and 120 MW. The capacity of pipe furnaces in atmospheric and atmospheric-vacuum plants is 100-1000 tonne/h.

With respect to their technological application, refinery furnaces are divided into ones for the atmospheric distillation of petroleum, the vacuum distillation of fuel oil, the stabilization of gasoline, catalytic reforming, pyrolysis, and so on.

Pipe furnaces of various designs are employed at refineries. They differ in how the heat is transferred (radiant, convection, and radiant-convection furnaces), in the number of furnace chambers (single-cell and multiple-cell furnaces), in the way of burning the fuel (externally and internally fired furnaces), in how the pipes are irradiated (with radiation on one or two sides), in the number of flows of the feed stock

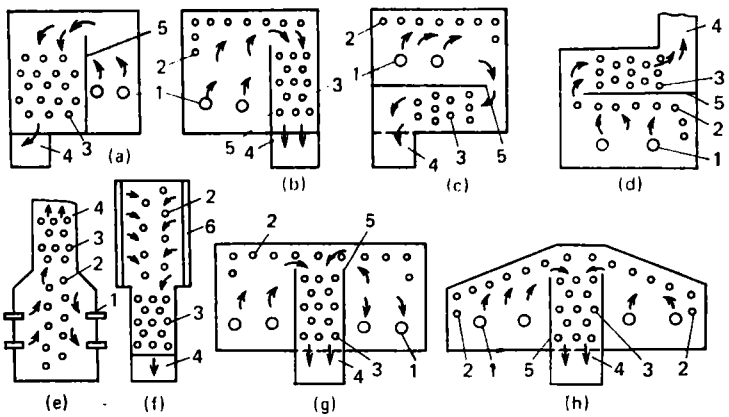

Fig. 25. Main types of pipe furnaces:

a—convection furnace; *b*—single-cell side-convection furnace; *c*—single-cell bottom-convection furnace; *d*—single-cell overhead-convection furnace; *e*—vertical cylindrical furnace; *f*—single-cell externally fired furnace with panel burners; *g*—double-end fired double-flow furnace with horizontal crown; *h*—double-end fired double-flow furnace with inclined crown; *1*—burners (nozzles); *2*—radiant coil; *3*—convection coil; *4*—flue; *5*—bridge wall; *6*—panel burners

(single-, double-, and multiple-flow furnaces), and in the arrangement of the coil pipes (furnaces with horizontal or vertical arrangement of the pipes). The main types of pipe furnaces are shown schematically in Fig. 25.

The main heat engineering indices characterizing the efficiency of furnace operation are the heat or calorific intensity of the pipe heating surfaces and the furnace space, and the furnace efficiency.

The *calorific intensity* of the pipe heating surfaces is defined to be the amount of heat transferred through one square metre of the surface during one hour.

Designers of pipe furnaces proceed from the value of the tolerated calorific intensity. The latter depends on the temperature of the pipe walls, the temperature and speed of the substance, and on the properties of the substance being heated. The tolerated calorific inten-

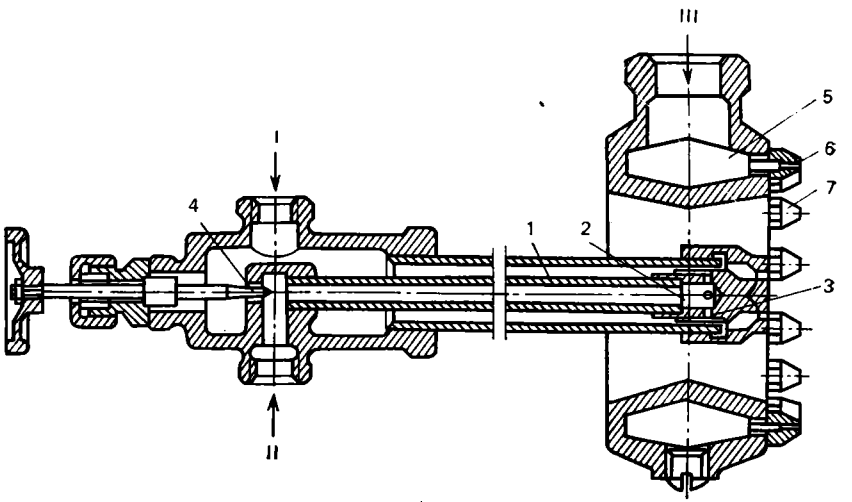

Fig. 26. Combined gas-petroleum nozzle ГНФ-1М:
1—internal tube; *2*—chamber; *3*—opening for passage of fuel; *4*—needle valve; *5*—annular header; *6*—discharge openings; *7*—jet.
Lines: *I*—steam; *II*—fuel oil; *III*—gas

sity is lower when the substance being heated in the furnace is more resinous and prone to form coke, its speed through the pipes is lower, and its final temperature is higher.

The calorific intensity of a heating surface in radiant pipes is higher than in convection ones. The mean calorific intensity of radiant pipes (in kW/m^2) in atmospheric distillation of petroleum is 30-45, in vacuum distillation of fuel oil is 25-30, in thermal cracking is 25-40, in catalytic reforming is 30-35, and in delayed coke formation is 25-35.

The *efficiency* of a furnace is the ratio of the utilized heat to the total amount of heat evolved in the combustion of the fuel. The task of furnace designers is to increase the efficiency of a furnace to 80% and even higher. For this purpose, furnaces are provided with more efficient burner devices and with systems for utilizing the heat of the flue gases emerging from the convection chamber. The heat is utilized in air heaters to heat the air before it is mixed with the fuel, and in waste-heat boilers to produce steam.

The basic elements of pipe furnaces are a foundation, a steel framework carrying the load produced by the pipes, roofs, crowns, ladders (staircases), a refractory lining and thermal insulation, a pipe coil consisting of seamless drawn pipes up to 24 metres long and 60 to 219 millimetres in diameter connected by return bends or welded-on U-bends, pipe walls supporting the pipes of the radiation and convection sections, pipe hangers supporting the radiant pipes in the

span between the pipe walls to prevent their sagging, fuel burning equipment (burner devices), flues, chimneys, platforms, etc.

Nozzles (liquid fuel) or burners (gaseous fuel) are used for burning the fuel. There are nozzles with steam, air, or mechanical atomization. The capacity of the combined gas and petroleum nozzles employed at refineries is 70-200 kg/h for liquid fuel and 50-200 m^3/h for gas. Figure 26 shows the design of a gas-petroleum nozzle ГНФ-1М. The liquid fuel under a pressure of 0.8-1.0 MPa is fed via internal tube *1* into chamber *2*, and then into helical ducts on the outer surface of

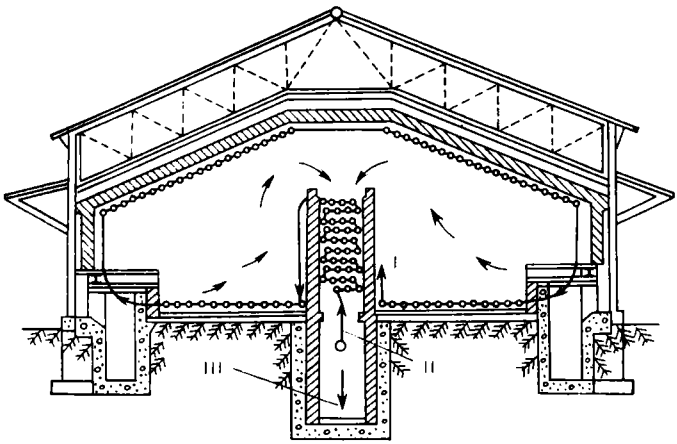

Fig. 27. Ridge pipe furnace of the hip (saddle) type:
I—product; *II*—feed stock; *III*—gases to chimney

the chamber. Steam under a pressure of 1.0 MPa is introduced via annular header *5*. It atomizes the whirled fuel, and the mixture of steam and fuel oil enters the furnace.

Gaseous fuel enters the nozzle via annular header *5*, and then jets *7* direct it into the furnace.

The existing designs of burner devices are insufficiently effective, and work is being conducted to improve them.

Lean-to and ridge pipe furnaces of the saddle type were used very widely in primary distillation plants erected prior to 1970, and also in a number of other technological plants of petroleum refineries. A section of a ridge (saddle) furnace is shown in Fig. 27. The furnace consists of two radiant chambers and a convection one. The latter is separated from the radiant chambers by refractory brick walls called bridge walls. The flue gases are removed from the furnace via a flue that begins in the bottom part of the convection chamber and a chimney (stack).

The coil pipes are fastened to the radiant chamber walls by pipe clips and arms made from heat-resistant steel, while in the convection

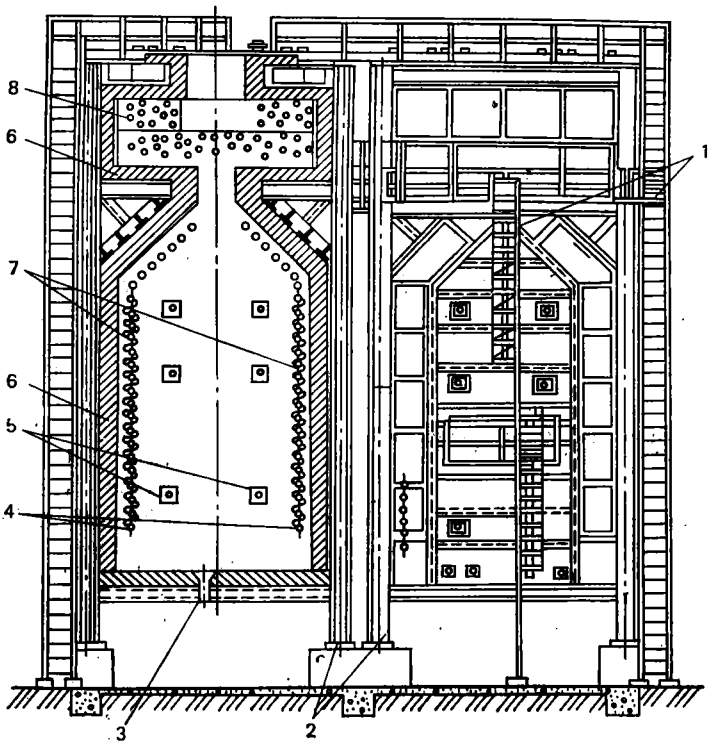

Fig. 28. Upfired furnace:

1—steel framework; *2*—reinforced-concrete uprights; *3*—nozzle windows; *4*—pipe clips; *5*—blast opening; *6*—reinforced-concrete blocks; *7*—radiation chamber pipes; *8*—convection chamber pipes

chamber they are laid on special grates. They are connected to one another by welded or sectional return bends. A radiant chamber contains two groups of pipes—a bottom one (the hearth screen) and a top one (the crown screen).

Hip-type furnaces have no heat utilization systems and operate with a large air excess factor. The efficiency of these furnaces does not exceed 50-60%. The erection of a hip-type furnace requires a large amount of alloy steel, and they occupy a large area. These furnaces are not being built at new plants, notwithstanding their universal nature and simplicity of design.

The shortcomings of hip-type furnaces have been eliminated in the designs of new ones. The latter include pipe furnaces with radiation walls formed of panel burners, furnaces with volume and bed combustion, upfired and updraft cylindrical furnaces.

Figure 28 is a cross section of an upfired furnace employed for heating fuel oil in the vacuum part of an atmospheric-vacuum plant with a capacity of 6-8 million tonnes a year.

The pipe coil of this furnace is made from seamless drawn pipes 152 mm in diameter with U-bends welded onto their ends. The pipe wall thickness is 8 mm. The convection chamber is in the top part of the furnace. The feed stock first passes through the pipes of this chamber, and then through the radiant part.

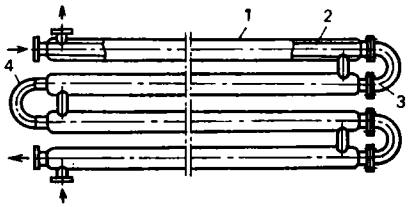

Fig. 29. Four-pass double-tube heat exchanger:
1—outer tube; *2*—inner tube; *3*—sectional U-bend; *4*—welded on U-bend

Heat Exchangers. The heat exchangers employed at refineries, and particularly in straight distillation plants, are divided into the following groups: (1) double-tube exchangers, (2) shell-and-tube exchangers, (3) air cooled apparatus, and (4) direct-mixing exchangers.

Double-tube exchangers (Fig. 29) are easily taken apart for cleaning and can be used with any difference between the temperatures

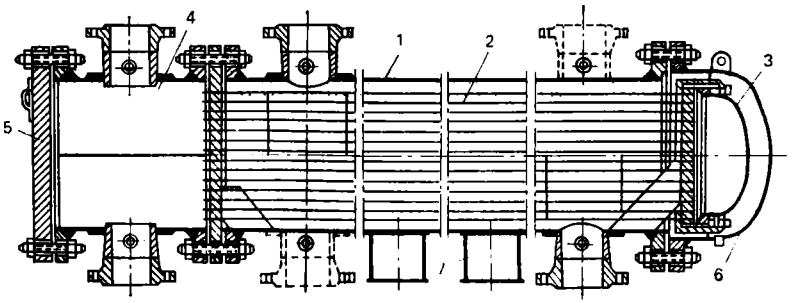

Fig. 30. Shell-and-tube heat exchanger with **floating head:**
1—shell; *2*—tube bundle; *3*—floating head; *4*—distributing chamber; *5*—lid; *6*—end plate; *7*—support

of the heat-exchanging media. They are employed in straight distillation plants for heating the feed stock by the residual products—fuel oil or tar.

Shell-and-tube exchangers have become quite popular at modern refineries. They are designed with rigid tubes or with a floating head.

Exchangers with a floating head (Fig. 30) are the main type of heat-exchange equipment at a modern refinery. They are used at primary distillation plants for heating the feed stock by the products being withdrawn, as water condensers, for heating of the stabilizer

feed stock, etc. The provision of a movable tube wall allows the tube bundle to freely move inside the shell, and the bundle is easily removed for cleaning and replacement. To improve the heat transfer conditions, the exchangers are designed with multiple passes (they have two, four, or six passes through the tubes).

The heat exchange processes in an exchanger with a floating head occur as follows. The liquid fed into distribution chamber *4* flows along the tube bundle into floating head *3*, turns around and flows back into the tube bundle. Several partitions can be installed in the distribution chamber and thus increase the number of passes through the tubes. Transverse partitions are installed in the intertube space to intensify heat exchange.

Beginning from the 1960's, air coolers have been widely used at refineries. Their employment makes it possible to reduce the consumption of circulation water, cut the losses of petroleum products with sewage, and lower the outlay for repairs and cleaning of the heat exchangers from scale. In modern primary distillation plants, up to 80% of the heat is removed in air coolers.

An air cooler consists of a bundle of tubes with headers (manifolds), a fan with an electric motor, regulating means, and a supporting part. Counterflow heat transfer is employed. The fan blows air through the intertube space. The tube bundle is cooled externally. The substance flowing inside the tubes is cooled as a result of the removal of heat through the surface. For the air to be uniformly distributed over the entire surface of the tubes being cooled, the fan is connected to the tube bundles via diffusors.

The tubes, headers, and frames form sections. The headers are provided with removable lids or plugs, which makes it possible to clean the inner surfaces of the tubes.

To intensify the transfer of heat from the outer surface of the tubes to the air, the tube surface is increased by using fins. The ratio of the total surface area of a fin tube to the outer surface area of the smooth tube at the root of the fins is called the **fin factor**. When this factor is higher, the coefficient of heat transfer from the external surface of the heat-exchange tubes to the air is larger. The machine-building industry produces standard air coolers with a fin factor of 9, 14.6, and 22.

Air coolers of various designs are in use. They differ in the arrangement of the tube sections. Horizontal (Fig. 31) and zigzag (Fig. 32) air coolers are used the most. Also available are low-flow air coolers and special coolers for highly viscous media in which the cooling tubes are contained in a heated jacket.

Primary distillation plants employ horizontal air coolers with a heat-exchanging surface area up to 1800 m^2 and zigzag ones up to 7500 m^2. Fuel oil is cooled in special coolers for highly viscous media.

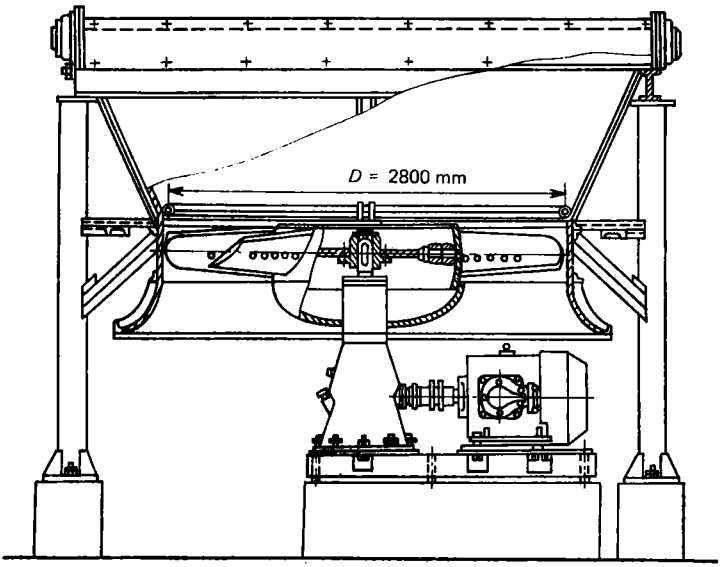

Fig. 31. Horizontal air cooler

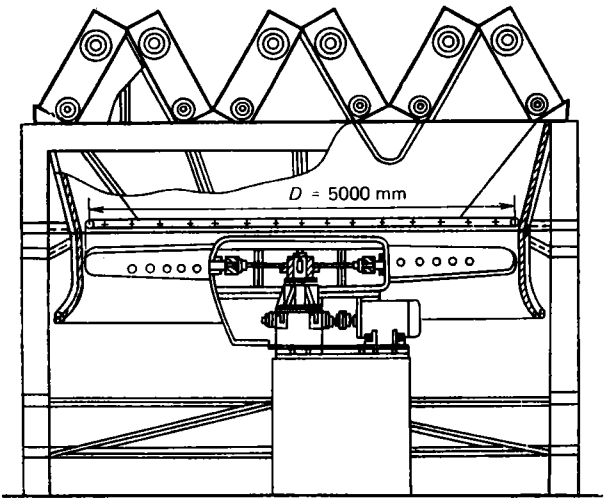

Fig. 32. Zigzag air cooler

The heat exchangers of primary petroleum distillation plants are characterized below:

Capacity of atmospheric-vacuum plant, million tonnes/year . . .	2	6
Feed Stock Heating Exchangers		
Heat exchange surface area of one unit, m^2	160	630-850
Diameter, mm	800	1200-1400
Length of tubes, m	6	9
Heat transfer coefficient, $W/(m^2 \cdot K)$	100-130	110-140
Condensers and Coolers of Topping and Atmospheric Columns		
Type	Shell-and-tube with floating head	Zigzag air cooler
Heat exchange surface area of one unit, m^2	160	5000*
Heat transfer coefficient, $W/(m^2 \cdot K)$	150-250	20-40**

* Area of finned surface.
** Calculated for finned surface.

5.6. Prevention of Corrosion

Causes of Corrosion in Petroleum Processing. The annual direct losses due to the corrosion of metal in apparatus, equipment, and pipelines in the petroleum refining and petrochemical industries in the USSR exceed 250 million roubles. Major corrosion occurs in atmospheric and atmospheric-vacuum plants for the primary distillation of petroleum. Corrosion in these plants is caused by:

(1) mineral salts, mainly chlorides, contained in the feed stocks; when the stock is heated, the salts decompose and form hydrogen chloride, which in the presence of moisture has a high corrosive activity;

(2) sulphur-containing compounds, which are present in most feed stocks processed today; the processing of sour petroleums is attended by the evolution of a large amount of corrosive substances—hydrogen sulphide and mercaptans;

(3) petroleum acids whose content in a number of petroleums reaches 2.0%;

(4) organochlorine compounds contained in petroleum; they decompose when heated in the furnaces of the primary processing plants with the formation of hydrogen chloride.

The simultaneous presence of several aggressive components accelerates the corrosion processes. Thus, the combined action of hydrogen chloride and hydrogen sulphide accelerates the destruction of carbon

steel by corrosion three or four times in comparison with the action of only one of these substances. Here the corrosion rate may reach 15-20 mm/year.

Corrosion processes occur the most intensively in condensers and coolers, the top part of rectification columns, furnace pipes and tubes, pipelines for hot residues (fuel oil and tar). An index of the intensity of corrosion of condenser-coolers and rectification columns is the content of iron ions in the water withdrawn from the reflux tanks and the pH of this water. The tubes of condensers-coolers at the side of the cooling circulation water also experience intensive corrosion.

Measures for Combatting Corrosion. The following measures are employed for effectively combatting corrosion at primary distillation plants: (1) manufacture of the equipment from corrosion-resistant materials; (2) subjecting of the feed stock to deep desalting and dehydration prior to distillation; and (3) the introduction of neutralizing substances and corrosion inhibitors.

To increase the service life of equipment, corrosive-resistant materials are used on the most dangerous sections. These include Grade X5M chromium-molybdenum and 0X13 chromium alloyed steels, brass, and a nickel and copper alloy called Monel metal. Some kinds of apparatus are manufactured from two-layer rolled metal. The inner surface experiencing the action of harmful compounds is made from alloyed metals, and the outer (load-bearing) one, from carbon steel.

A soda-alkaline solution, ammonia, and ammonia water are employed as neutralizing substances. A soda-alkaline solution is introduced into desalted petroleum to bind the thermally unstable calcium and magnesium chlorides and to neutralize the organic acids and hydrogen chloride. Ammonia or ammonia water is fed into the vapour lines of columns (the lines from the top of columns to the condenser-coolers) for maintaining the pH of the drain water at a level of eight or nine.

The introduction of neutralizing additions lowers corrosion by 70-80%. Corrosion is diminished more efficiently by using special substances called **corrosion inhibitors**. They are organic compounds that form a thin protective film on the surface of a metal.

Efficient corrosion inhibitors have been developed in the USSR. The joint effect of neutralizers and inhibitors can lower the rate of corrosion to 0.01 mm/year and below.

5.7. Operation of Distillation Plants

Control and Regulation of Operation. The operation of the technological plants of a refinery is constantly controlled by the production staff with the aid of the relevant instruments, and also by directly observing the state of the apparatus, equipment, communications,

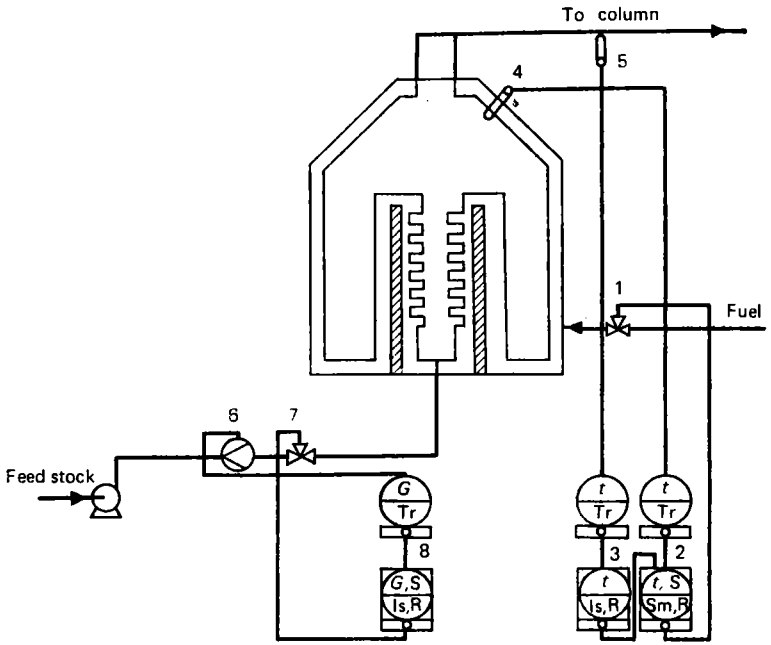

Fig. 33. Schematic diagram of pipe furnace regulation:
1, *7*—valves; *2*, *3*—regulators; *4*, *5*—thermocouples; *6*—membrane; *8*—regulating unit

and by studying laboratory analyses, of the quality of the feed stock and the products.

Primary distillation plants are outfitted with a large number of instruments for measuring and automatically regulating the rate of flow, temperature, pressure, and level of the substances in the apparatus and pipelines. A modern atmospheric-vacuum plant has over 2000 instruments for automatic control and regulation.

The normal operation of a primary distillation plant depends in many ways on the technological conditions in the furnaces. How a pipe furnace is controlled is shown in Fig. 33. The main parameter controlled in a pipe furnace is the temperature of the stock being heated at the furnace outlet. This temperature must be kept constant.

At present, refineries employ interacting control of the temperature regime of pipe furnaces. The system has two regulators *2* and *3*. Regulator *2* maintains a constant temperature of the flue gases over the bridge wall of the furnace. When the temperature deviates from its preset value, the regulator alters the supply of fuel to the furnace by actuating valve *1*.

At a constant temperature, composition, and space velocity of the stock being heated and at a constant state of the furnace coil,

the temperature of the stock at the furnace outlet will be constant. But these parameters can change and, consequently, the temperature of the stock at the furnace outlet will also change. To stabilize the temperature of the stock, regulator *3* is installed at its outlet from the furnace and is connected to thermocouple *5*. When the temperature changes, regulator *3* alters the setting of regulator *2* and, therefore, changes the temperature of the flue gases over the bridge wall within the tolerated limits by altering the fuel supply.

The temperature regime of furnaces is also affected by the uniformity of feeding in the stock. Since a frequent variation in the space velocity of the stock causes the temperature in the furnace to change and lowers the duration of safe service of the coil tubes, the space velocity of the stock in a furnace must be kept constant. For this purpose, membrane *6* connected to a registering device and to regulating unit *8* is installed on the delivery line of a pump. The regulating unit in accordance with the set assignment acts on valve *7*.

The task of controlling a rectification column is to ensure the preset precision of separation with the equipment operating under conditions of the maximum economy. Since rectification columns are used under various operating conditions, their control schemes can vary. When separating multicomponent mixtures in columns, the rate of flow and composition of the feed stock, the temperature at the top and bottom of the column, the pressure, and the level of the residue at the bottom of the column are regulated manually or automatically.

The temperature at the top of a column is kept at the preset level by altering the space velocity of the reflux. The temperature at the bottom is regulated by altering the amount of the heat-carrying agent fed into the boiler or the supply of fuel into the pipe furnace used to heat the "hot stream". The pressure in a column is controlled: (1) by changing the amount of uncondensed substance (gas) discharged from the reflux tank; (2) by changing the amount of water supplied for cooling the stock (employed for vacuum columns); and (3) by a governor valve on the line discharging vapour from the column.

But both the temperature and pressure are only indirect parameters enabling one to appraise the process and the quality of the products. The precision of separation can be appreciably improved by using the recently developed quality analysers in the control systems. Thus, in gasoline stabilizer columns, a constant stable gasoline vapour pressure is maintained by changing the supply of the heat-carrying agent to the stabilizer reboiler. In stripping columns of atmospheric-vacuum plants, the flash point of the withdrawn product is regulated by feeding in steam.

Figure 34 presents a diagram of topping column regulation. To ensure a constant charging of the column and stabilize its operation, the space velocity of the feed stock is controlled by a special gover-

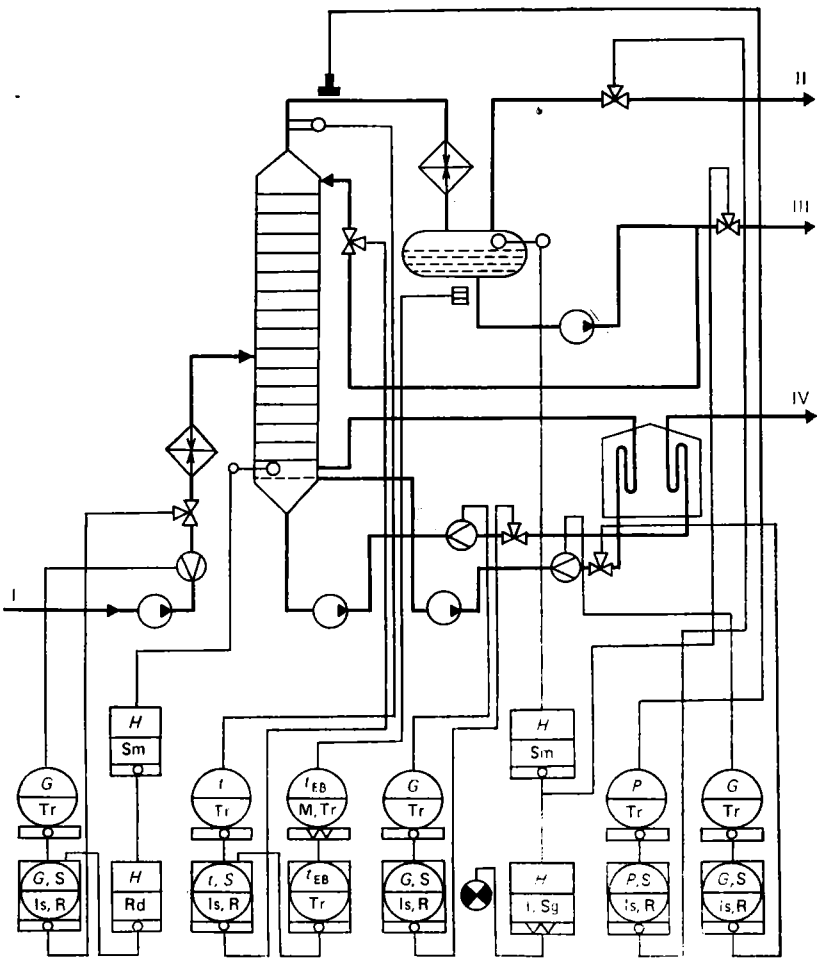

Fig. 34. Schematic diagram of topping column regulation:
I—petroleum; *II*—gas; *III*—gasoline to stabilizer; *IV*—half-topped petroleum to atmospheric column

nor depending on the level of the topped petroleum in the bottom part of the column.

The temperature at the top of the column depends on the end boiling point which the gasoline fraction withdrawn in the column must have. It is kept constant by feeding in a definite amount of direct reflux and is corrected by an automatic end boiling point analyser. Under stable operating conditions, the end boiling point of the gasoline, the temperature at the column top, and the amount of reflux

all remain constant. If the quality of the gasoline changes for some reason or other, for example owing to a change in the composition of the feed stock, the automatic end boiling point analyser changes the temperature at the column top. This new temperature is maintained by feeding the required amount of the reflux into the column.

The space velocity of the topped feed stock and the "hot stream" is kept constant, while the temperature of the hot stream and, consequently, that of the column bottom is regulated by changing the supply of fuel into the furnace.

Laboratory Control of Feed Stock and Product Quality. Owing to laboratory control, plant operators receive additional information allowing them to conduct the technological process properly.

The quality of the feed stock and the distillation plant products is studied in the laboratory. The analysis of the feed stock consists in determining its specific gravity, and the content of salts, water, and light fractions. The analysis of the gasoline fractions consists in determining their octane number and the presence or absence of active sulphurous compounds (the copper strip test). Fractional distillation of the gasoline is also performed. For the middle fractions—the kerosene and diesel ones—the fractional composition, viscosity, and the flash, pour, or cloud point are determined.

If the results of a laboratory analysis reveal that the products do not meet the standard requirements, the operator must immediately find the cause of this and when necessary change the operating conditions of the plant or its individual apparatus.

A lot of time is spent for laboratory analysis, and its results are received at the plant in 1.5 or 2 hours after the sample has been taken, i.e. when the operator can no longer correct the quality of the products withdrawn during this time. Moreover, a large number of employees are occupied in laboratory control. This is why the main trend in the improvement of primary distillation plants consists in a substantial increase in the degree of automation and a transition to automatic product quality control.

The quality analysers in the flow line developed during recent years make it possible to do without sending samples of the feed stock and products to the plant or refinery laboratory and obtain the results of analysis directly in a plant. In the future, complete automation of the technological process will be achieved by connecting the quality analysers to the governors of the technological conditions. Quality analysers determining the fractional composition, flash point, and specific gravity of a product are already functioning in many straight distillation plants.

Organization and Recording of the Operation of a Plant. The technological rules are the main document determining the procedure of plant operation. The rules contain a characteristic of the feed stock, the target products, semifabricated and by-products, a description

of the technological process and a technological diagram of the plant, and the regime parameters. The rules contain data on possible faults, their causes and remedies. They also list the control and automation means whose failure necessitates an emergency stopping of the plant.

The **flow chart** is an operative document kept at the plant and containing the main requirements for maintaining the stipulated regime of the technological process. The flow chart is displayed in a noticeable place in the operator's room and is the main guide for the senior operator and all workers at the plant. The chart is revised annually for each plant. The flow charts usually contain the range of controlling various parameters of the technological regime.

The operator analyses plant operation with the aid of the notes on the technological regime and the quality of the feed stock and products. The regime indices are recorded at two-hour intervals in a special regime sheet. The data of laboratory analyses are also entered into this sheet. Another important document is the log book. It is intended for recording information on regulation of the regime in connection with a transfer to the withdrawing of other products, on violations of the regime in the course of a shift, and on faults in plant operation. A shift coming on duty acquaints itself with the operation of the plant during the preceding period on the basis of the log book and regime sheet.

Starting a Plant. To start a primary distillation plant after its erection or repairs, one must perform the following operations: preparation for starting, cold circulation, hot circulation, and a transition to normal operation.

During the preparatory period, all the apparatus, fittings, pumps, and communications of the plant are inspected. After they have been found to be in good order, compressed air for the instrumentation, water, steam, and electrical energy are supplied to the plant. Checking of the good order of the steam and water pipelines, sewerage, and electrical equipment is followed by washing and pressurizing the apparatus and pipelines with water. When a plant is being started in cold weather, washing with water is not performed, and petroleum or a product with a low pour point is used for pressure tests.

After the pressure tests with water, all defects found are remedied, the water is drained off, and the plant is prepared for accepting the feed stock (petroleum). Before the feed stock is delivered to the plant, circulation of the liquid fuel is regulated, the state of the electrical dehydrators is checked, the instrumentation is checked and tested, and reagents are delivered to the plant. The petroleum is taken in from the tanks by the feed stock pump and is fed through the heat exchangers and electrical dehydrators into topping column *8* (see Figs. 17 and 18). When the normal level is reached in column *8*, the feed stock pump is stopped, the gate valve at the inlet to column *8* is closed, and the heat exchangers are tested for a pressure exceeding

the working one 1.5 times. After pressurizing the system of heat exchangers and electrical dehydrators with petroleum, the furnaces and pipelines between them and columns *8* and *16* are tested under pressure in a similar way.

The next stage in starting is cold circulation. It is needed for the final uncovering of faults, regulating the operation of the pumps, and adjusting the control instruments and automatic devices. In cold circulation, the petroleum is fed by the feed stock pump through the main apparatus and is returned to the suction line of this pump.

Hot circulation is intended for the smooth warming up of the apparatus and equipment and for removing water from the system. Before starting hot circulation, one must switch on the rate of flow and level governors on the apparatus, and the potentiometers registering the temperature at the outlet of the feed stock from the furnace.

Next steam is blown through the furnace chambers, and the furnace is fired with observance of the safety rules. The temperature of the petroleum at the outlet from furnace *15* is raised slowly at a rate of 10-15 K/h. When a temperature of 85-100 °C is reached at the top of the column, evaporation of the water from the system begins. A sign that the water has completely evaporated is the sharp elevation of the temperature at the top of the column. When the temperature at the tops of columns *8* and *16* rises to 120-130 °C, a reflux is fed to the tops of these columns, and the systems for the automatic control of the temperature at the tops are switched on.

The preset temperature of the column top is established by regulating the rate of flow of the reflux, after which proper functioning of the systems of circulating refluxes is adjusted. When the temperature of the bottom of columns *8* and *16* reaches 200 and 300 °C, respectively, fresh feed stock is supplied to the plant, and the gate valves between the atmospheric and the stripping columns are opened.

As a level of the liquid appears in the stripping columns, the withdrawal pumps are switched on. The kerosene and diesel fractions are not discharged immediately into the product storage tanks, but are initially discharged into the feed stock of the plant. This is done until confirmation is obtained from the laboratory that the quality of these fractions corresponds to the specifications.

Combined plants for the primary processing of petroleum are put into operation by units. First the desalting and atmospheric distilla tion units are started, next the stabilizer and secondary distillation units, and then the vacuum unit.

Stopping. Progressive refineries have accumulated experience in the uninterrupted operation of atmospheric and atmospheric-vacuum plants during 1.5-2 years and more. A planned shutdown prior to maintenance or general overhauling is performed as follows. The temperature at the outlet of the petroleum from the furnace is gradually

lowered, and the capacity of the plant is halved. After the temperature at the furnace outlet has dropped to 320 °C, the plant is transferred to hot circulation—the supply of the feed stock and the discharge of the products are discontinued. Next the delivery of live steam into the columns is stopped, the lines through which the side-cut fractions flow from the atmospheric column into the stripping sections are shut, and the products remaining in the stripping sections are pumped into the feed stock.

Next the circulation reflux pumps are stopped. But the feeding in of the direct reflux is continued for some time to gradually cool the column. The feeding in of the direct reflux and the switching off of all the pumps and fans of the air coolers are performed only after the liquid disappears from the reflux tanks.

After the temperature at the furnace outlet lowers to 250 °C, all the nozzles are extinguished, and the gate valves on the fuel lines are shut. When the temperature at the bottom of columns *8* and *16* lowers to 150-160 °C, the hot circulation is stopped.

Preparation for Repairs. After a plant has been shut down, it is prepared for repairs. The object of this work is to ensure safe conditions for the repairmen and prevent any possibility of an explosion or fire during the repairs.

The petroleum products are discharged from all apparatus and pipelines, steam and an inert gas are blown through the apparatus and pipelines, and end caps are installed on the latter. An air sample is taken from the prepared apparatus to check for the absence of gases. With satisfactory results of the analysis, the drain lines are opened, and the relevant documents are drawn up for the conducting of welding and other repairs in the apparatus.

5.8. Safety Engineering

Danger Sources in Petroleum and Gas Processing. Petroleum, combustible gases, and petroleum products have dangerous and harmful properties. When the technological conditions are violated and the safety rules are not observed at enterprises processing petroleum and gas, breakdowns and accidents occur, and the workers acquire occupational diseases. Breakdowns and accidents are due to the following reasons.

1. Petroleum and its products are combustibles and, moreover, can self-ignite at a definite temperature. In primary processing and in some other processes, the feed stock and products are heated to temperatures close to the self-ignition one and even exceeding it. At the same time, plants have sources of an open flame—pipe furnaces.

2. A large number of products participate in the technological processing of petroleum and gas, and their vapours can produce explosive mixtures with air. Such mixtures form in closed premises and inside

apparatus. When an ignition pulse occurs, the mixtures explode. An ignition pulse may be caused by a spark from faulty electrical equipment, an open flame, etc. Explosions and fires can be caused by static electricity that appears in the friction of two insulators or insulators against metal (when petroleum is being pumped along pipes and rubber hoses, petroleum products are poured from one tank into another, in the transportation of loose materials on conveyors, etc.). Discharges of atmospheric electricity—lightnings—are also a source of ignition.

3. The technological processing of petroleum and gas is often conducted at an increased pressure, and apparatus and pipelines may rupture owing to a sudden surge of the pressure above the rated one.

4. Petroleum, its products, and most reagents relate to harmful substances having toxic properties.

5. Refineries are outfitted with electrical dehydrators, electric motors, illumination appliances, and other electrical devices. The improper handling of these live devices may result in electric shocks, when an entire organism is injured by the current, and local burns of the body.

Basic Safety Precautions. To prevent breakdowns and accidents, the safety rules must be strictly adhered to. Everyone beginning to work at a refinery must be instructed in safety engineering, fire prevention, and the handling of gases.

The following basic safety measures are provided for at refineries.

1. Suction and exhaust ventilation is provided in all closed premises. If an explosion or toxically dangerous concentrations of products can appear in premises, special instruments are installed in them that give a signal when the concentration of the explosive or toxic substances approaches the maximum tolerated value.

2. Explosion-proof (flame-proof) electric motors are installed in premises with an explosion hazard, or ventilated frame machines using air at an excess pressure.

3. Stationary and mobile mechanisms are provided to prevent accidents during repairs. They include overhead cranes for pump repair, jib cranes on the columns of the apparatus, and extractors for removing tube bundles from heat exchangers.

4. The technological equipment and general refinery facilities are equipped with stationary and mobile fire-extinguishers.

Prevention and Elimination of Accidents. Accidents at plants are caused by violations of the technological conditions, the plant operating rules, the stopping of the delivery of the feed stock, steam, fuel, water, or electrical power to a plant.

When the delivery of the feed stock is stopped, the plant should be transferred to hot circulation. If the power supply is cut off, an emergency shutdown must be performed immediately. In this case, the following operations must be performed consecutively: ex-

tinguish the furnace nozzles, shut the gate valves on the intake and delivery lines of the pumps while carefully watching the pressure in the apparatus. It is necessary to switch off all the electric motors and other electrical equipment to prevent spontaneous starting when the power is switched on. When the supply of power has been renewed, the plant is brought out to normal operating conditions in accordance with the starting instructions.

The procedure to be followed in eliminating accidents is set out in detail in the production instructions, the safety rules, and in the accident elimination plan.

5.9. Technical and Economical Indices of Plants

The efficiency of primary distillation plant operation is appraised by indices such as the capacity of a plant, the duration of continuous running, the yield of the target fractions (as a percentage of the potential content of these fractions in the feed stock), the quality of the products, and the observance of the rates of consumption of steam, water, electrical energy, and reagents.

The technical and economical indices are substantially improved by the reconstruction and modernization of existing plants. The main trends here are an increase in the surface area of the heat-exchange apparatus, the installation of more powerful motors for the pumps, the installation of additional pipes in the furnaces, and the replacement of some obsolete kinds of equipment.

The main trends for improving primary distillation plants consist in ensuring a high yield of light-end products and oil distillates relative to their potential yield, improving the quality of the distillates, increasing the utilization of energy resources by more complete utilization of the heat of the emerging streams, reducing the specific consumption of fuel, electrical energy, water, air, reagents, and introducing progressive systems of control and automation.

5.10. Secondary Distillation of Petroleum Fractions

Sometimes the fractions produced in primary distillation have to be divided into narrower ones, each of which is then used as required. Such separation is performed in separate secondary fractionators included in atmospheric-vacuum and atmospheric plants. Almost all refineries have blocks or independent fractionators for the secondary processing of gasoline.

5.10.1. Gasoline

Stock and Products. The wide-range gasoline fraction after stabilization is the stock of a fractionator. The following gasoline fractions are its products:

(1) IBP-62 °C—used as an essential component of motor gasoline ensuring its starting properties (see Sec. 3.2); it consists of pentanes and isohexane, and also contains a certain amount of butane and hexane;

(2) 62-85 °C—a stock for producing benzene in platforming plants (see Sec. 7.10);

(3) 85-105 °C—a stock for producing toluene in platforming plants;

(4) 105-140 °C—a stock for producing xylenes in platforming plants;

(5) 140-180 °C—used as a component of jet fuel or as a stock in catalytic reforming plants for improving the octane number.

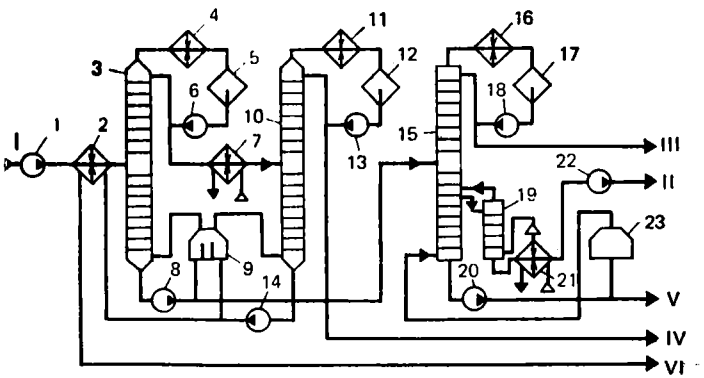

Fig. 35. Flow diagram of secondary gasoline fractionator:

1, 6, 8, 13, 14, 18, 20, 22—pumps; *2*—heat exchanger; *3, 10, 15, 19*—columns; *4, 11, 16*—condensers and coolers; *5, 12, 17*—tanks; *7*—steam heater; *9, 23*—pipe furnaces; *21*—boiler; *I*—IBP-180 °C fraction; *II*—105-140 °C fraction; *III*—85-105 °C fraction; *IV*—IBP-62 °C fraction; *V*—140-180 °C fraction; *VI*—62-85 °C fraction

In some fractionators, the set of fractions produced varies somewhat, namely, the fractions 62-85 °C, 85-120 °C, and 120-140 °C are produced.

Flow Diagram. A flow diagram of a secondary gasoline fractionator is shown in Fig. 35. The IBP-180 °C fraction is fed via heat exchanger *2* into column *3* from whose top the IBP-85 °C fraction is withdrawn. This fraction is then fed into column *10*, where it is separated into two fractions: IBP-62 °C and 62-85 °C.

The 85-180 °C fraction from the bottom of column *3* is fed into column *15*. The 85-105 °C fraction (or 85-120 °C) is obtained from the top of column *15*, and the 140-180 °C one from its bottom. This column also yields the 105-140 °C (or 120-140 °C) side-cut fraction. The latter flows into stripping column *19*, where the light-end fractions are distilled from it and recycled to column *15*.

The heat needed for rectification in columns *3*, *10*, and *15* is supplied in the heating coils of furnaces *9* and *23* through which the circulating product is pumped from the bottom of the columns. The

heated product is recirculated in the form of a vapour and liquid mixture or gasoline vapour to under the bottom plate of the relevant column.

The heat needed for the distillation of the light-end components from the 105-140 °C fraction is supplied in boiler *21*. Part of the recirculating product from column *15* returning from furnace *23* is used as the heat-carrying agent in boiler *21*.

The overhead products of rectification columns *3*, *10*, and *15* condense in water shell-and-tube condensers *4*, *11*, and *16*. The condensates are collected in reflux tanks *5*, *12*, and *17*, from which they are partly recycled into the columns as a direct reflux. The remaining quantity is supplied for further processing (the overhead product of column *3*) or is withdrawn from the plant (the overhead products of columns *10* and *15*).

Technological Conditions. These conditions depend on the boiling range of the produced fractions. The temperatures and pressures in producing the 85-120 °C fraction from the top of column *15* are indicated below:

Temperature, °C		Pressure in columns, MPa	
top of column *3*	104	*3*	0.23-0.28
bottom of column *3*	170	*10*	0.18-0.22
top of column *10*	78	*15*	0.02-0.06
bottom of column *10*	122		
top of column 15	105		
bottom of column *15*	168		
withdrawal of side-cut fraction	130		

Material Balance. An example of the material balance of a secondary fractionator plant processing the IBP-180 °C fraction of Romashkino (I) and Samotlor (II) petroleums (in %) into five fractions is given below:

	I	II
Feed		
Gasoline fraction IBP-180 °C . . .	100.0	100.0
Products		
Fractions IBP-62 °C	10.6	21.9
62-85 °C	14.4	12.9
85-105 °C	15.6	12.5
105-140 °C	24.8	23.8
140-180 °C	33.9	28.2
Losses	0.7	0.7
Total	100.0	100.0

5.10.2. Lubricating Oil Fractions

Oil-producing facilities include vacuum secondary-distillation plants. Here the wide-boiling fraction after passing through several purifying stages (see Chap. 10) is divided into two or three components

with a narrower range. These fractions are then blended to obtain lubricating and similar oils of special grades. There are also plants for the vacuum distillation of gatches, in which the intermediate product of paraffin wax production—gatch (see Chap. 11) is also divided into narrow-boiling fractions subsequently used in the production of paraffin waxes.

The vacuum plants for the secondary distillation of lubricating oils and gatches are outfitted with a vacuum column, a furnace, heat exchangers, and pumps.

Chapter 6

THERMAL PROCESSES

6.1. Brief Outline of Secondary Petroleum Treatment Processes. Thermal Processes

Classification of Secondary Processes. The primary distillation of petroleum makes it possible to separate from it in the form of individual fractions only substances that are present in it initially. The quality, quantity, and assortment of the products are limited completely by the chemical composition of the feed stock.

To increase the yield of the light-end products—gasoline, kerosene and diesel fractions, and improve the quality of the primary distillates, processes known as secondary ones are widely used. The employment of secondary processes makes it possible to additionally obtain up to 30-35% of the feed stock as light-end products, improve the antiknock properties of gasoline, the thermal stability of jet fuel, lower the sulphur content in diesel fuel, and so on.

Secondary processes are also employed to produce the raw materials for petrochemical enterprises—gaseous and liquid alkenes, arenes, normal alkanes, etc.

The secondary petroleum treatment processes are divided into thermal and thermocatalytic ones. Processes of treating petroleum gases, producing oils and paraffin waxes, and purifying light-end and black products are set aside in special groups.

Thermal Processes. This group includes processes based on the ability of the organic compounds in petroleum to decompose, become chemically modified, and enter into various secondary reactions with one another under the effect of high temperatures. The thermal processes employed at refineries include thermal cracking, coking, and pyrolysis.

Thermal cracking is conducted at a pressure up to 5 MPa and temperatures from 420 to 550 °C. The basic technical principles of crack-

ing under pressure were set out in a patent granted in 1891 to the Russian engineers Shukhov and Gavrilov. But industrial mastering of the process began only in the 20th century, when in connection with the development of motor vehicle transport, the demand for gasoline increased considerably. Owing to thermal cracking, the straight-distilled product was supplemented with gasoline from the middle distillates (ligroin, kerosene-gas oil fractions), and fuel oil. The yield of gasoline reached 30% of the feed stock, while the octane number of the product was mainly higher than that of straight distilled gasoline.

In the 1950's in connection with a growth in the demand for the middle distillates, a change in the feed stocks used at plants took place. Only the heavy fractions—the residues of petroleum distillation—were fed for thermal cracking. The cracking residue, which is used as a furnace fuel, became the target product. A variety of thermal cracking was developed called **viscosity breaking (visbreaking)**. Visbreaking (mild cracking) is conducted at a pressure not exceeding 2.0 MPa and a temperature of 400-480 °C and is intended for converting tar into furnace oil with a low viscosity and pour point.

In the 1960-1980's, the thermal cracking process was not given due attention, and no new plants were erected. At present, in the USSR and other countries in connection with the trend to the more efficient utilization of crude petroleum and to deeper refining of petroleum, the attitude to this process is changing because it enables light products to be produced from the heaviest distillation residue—tar. At a number of Soviet refineries, visbreaking blocks have been erected as a part of combined plants for fuel oil processing (see Sec. 13.2).

The formation of coke in thermal cracking limits the possibilities of further deepening of the process. But if one does not fear coke formation, the yield of light distillates can be substantially increased. A thermal process yielding petroleum coke as a product in addition to a distillate is called **coking**.

Coking is conducted at a pressure of 0.1-0.4 MPa and a temperature from 450 to 540 °C. Cracking residues obtained in thermal cracking, heavy pyrolysis resins, lubricating oil production residues, and tar are employed as the feed stock. The main purpose of the process is to produce petroleum coke. The latter is the starting material for the fabrication of electrodes, anode compound, and other valuable products. Coking is also considered as a process making it possible to produce an additional amount of light petroleum products from heavy feed stock. The increase in the demand for light petroleum products and petroleum coke is why new coking plants are going up throughout the world.

The technology and equipment of the coking process are being constantly improved. The simplest coking plants—coking stills, began to be erected back in the 1920's. At present, coke is mainly

produced in unheated chambers (the delayed coking process). But some grades of coke are still produced as previously only in stills. There is also a coking process in a fluidized bed, but it is not employed for the production of electrode coke.

Pyrolysis is conducted at a pressure close to atmospheric and a temperature from 750 to 900 °C and is the "oldest" of the thermal petroleum treatment processes. The first pyrolysis plants were built in Russia back in the 1870's. They produced illuminating gas from kerosene by pyrolysis. It was discovered later that the pyrolysis resin contains aromatics—benzene and toluene. The erection of pyrolysis plants was begun to increase the production of these substances. Especially many pyrolysis plants were erected during the first world war because toluene was required for the preparation of the explosive trinitrotoluene (TNT).

At present, pyrolysis has become one of the main processes for producing petrochemical raw materials. Pyrolysis plants produce gases rich in the unsaturated hydrocarbons ethylene and propylene. Processing of the liquid pyrolysis products yields a broad range of valuable products, namely, a butylene-butadiene fraction, aromatics, raw materials for the production of technical carbon, naphthalene, etc. The saturated hydrocarbon gases and gasoline fractions are subjected to pyrolysis. The pyrolysis of methane is a special form of this process. It is conducted at temperatures up to 1200 °C and is intended for the production of acetylene, hydrogen, and technical carbon.

6.2. Thermodynamics and Kinetics of Thermal Hydrocarbon Reactions

The reactions of petroleum feed stock hydrocarbons at high temperatures are exceedingly diverse. The thermal decomposition of molecules is attended by reactions of synthesis and, partly, of isomerization. Many of these reactions are reversible. Individual components of the feed stock can react in different directions, but at different rates and with a different thermodynamic probability. The main factor affecting the direction, rate, and extent of conversion of feed stock hydrocarbons is the temperature.

When studying thermal and catalytic reactions of hydrocarbons, we must determine first of all how the conditions of a process affect the direction of a reaction and the degree of conversion of the feed stock when equilibrium is reached. In other words, the thermodynamic probability of a reaction is ascertained, and the equilibrium constant is evaluated.

The *thermodynamic probability* of a process is determined by the change in the Gibbs energy ΔG of the system as a result of a reaction:

$$\Delta G = G_{\text{fin}} - G_{\text{in}} \tag{6.1}$$

The *Gibbs energy* is defined to be that part of the internal energy of a system that can be transformed into work. It is related to the other fundamental thermodynamic functions, i.e. the enthalpy (heat content) H and entropy S by the equations:

$$G = H - TS \tag{6.2}$$

$$\Delta G = \Delta H - T\Delta S \tag{6.3}$$

where T is the absolute temperature, K.

We remind our reader that the change in the enthalpy ΔH for reactions proceeding at constant pressure is the heat effect of a reaction taken with the opposite sign, while the term $T\Delta S$ is the part of the internal energy of a system that can be converted into work.

If at the selected pressure and temperature a reaction will proceed spontaneously from the left to the right, the store of Gibbs energy will diminish because part of it is converted into work, and ΔG will be negative. When chemical equilibrium sets in, the Gibbs energy of the final system will equal that of the initial one, and by Eq. (6.1) $\Delta G = 0$. Hence, the higher the positive value of ΔG, the lower is the possibility of a given reaction from the thermodynamic viewpoint.

The sign of ΔG indicates the thermodynamic probability of the forward reaction. The higher the absolute value of a negative ΔG, the larger can the extent of the reaction be and the higher will the equilibrium concentrations of the products be.

The value of ΔG can be used to calculate the equilibrium constant K_{eq} by the equation

$$-\Delta G = RT \ln K_{eq} \tag{6.4}$$

or

$$\log K_{eq} = -\frac{\Delta G}{19.13T} \tag{6.5}$$

where R is the gas constant equal to 8.317 J/mol.

Since the equilibrium constant is the ratio of the product of the concentrations (or of the partial pressures for gas mixtures) of the reaction products to that of the concentrations of the reactants, then when knowing K_{eq}, we can evaluate algebraically the possible yields of the products.

The value of ΔG is found by using tabulated data on the change in the Gibbs energy of formation of the reactants and products of a reaction from their elements (ΔG°_{form}) with a view to the stoichiometric coefficients of the reaction equation.

The superscript ° on a thermodynamic quantity (in our case on the Gibbs energy of formation ΔG°_{form}) indicates that the value of the quantity is given for standard conditions ($T = 298.16$ K and a partial pressure of the substance of 101 325 Pa).

The quantities ΔG and K_{eq} depend greatly on the temperature. For temperatures up to about 1000 °C, this relation is approximately linear:

$$\Delta G_T = A + BT \tag{6.6}$$

Tables of thermodynamic quantities give the values of ΔG°_{form} for hydrocarbons and other substances at various temperatures (Table 6).

Table 6. **Gibbs Energy of Formation ΔG°_{form} (in kJ/mol) of Selected Hydrocarbons at Various Temperatures**

Hydrocarbon	Temperature, K			
	298.16	500	800	1200
Methane	−50.828	−32.817	−2.302	41.039
Ethane	−32.898	4.889	66.633	151.563
Propane	−23.498	34.447	127.443	255.362
Butane	−17.143	60.857	185.039	355.096
Heptane	8.119	147.076	366.024	664.072
Tetradecane	66.968	369.618	789.423	1386.773
Ethylene	68.146	80.546	102.501	134.317
Propylene	62.741	93.965	145.700	218.278
1-Butene	71.531	123.682	206.974	321.197
1-Decene	121.292	295.533	568.472	938.722
Cyclopentane	38.633	122.426	256.994	441.279
Cyclohexane	31.767	142.603	317.928	554.918
Methylcyclopentane	35.786	138.120	301.063	523.071
Benzene	129.900	164.243	221.157	300.476
Toluene	122.343	175.004	260.488	378.793
Cumene	137.028	232.125	382.889	588.900
Acetylene	209.280	197.540	180.733	159.423
1,3-Butadiene	150.722	180.189	228.029	294.236

Knowing ΔG°_{form} at two temperatures, we can compile two equations for any reactions of petroleum hydrocarbons being studied (for which tabulated values of ΔG°_{form} are available). The solution of these simultaneous equations yields the coefficients A and B in Eq. (6.6). The further investigation of this equation reveals how the temperature affects the state of equilibrium and the thermodynamic probability of a reaction.

For example, for the reaction of decomposition of heptane into butene and propane:

$$C_7H_{16} \rightarrow C_4H_8 + C_3H_8 - Q$$

using the data of Table 6, we find for a temperature of 25 °C (298.16 K):

$$\Delta G_{298} = \Delta G^{\circ}_{form}(C_4H_8) + \Delta G^{\circ}_{form}(C_3H_8) - \Delta G^{\circ}_{form}(C_7H_{16})$$
$$= 71\,531 - 23\,498 - 8119 = 39\,914 \text{ J/mol}$$

Since ΔG is positive, the reaction will not proceed at room temperature.

Similarly, for 800 K, again using the data of Table 6, we find $\Delta G_{800} = -31\ 607$ J/mol. Inserting the obtained values into Eq. (6.6), we obtain:

$$\left.\begin{aligned}\Delta G_{298} &= A + B \times 298 = 39\ 914\\ \Delta G_{800} &= A + B \times 800 = -31\ 607\end{aligned}\right\}$$

Solution of this system yields $A = 82\ 393$ and $B = -142.5$. Hence, Eq. (6.6) for this reaction is:

$$\Delta G = 82\ 393 - 142.5T$$

Assuming now that $\Delta G = 0$, we find the temperature at which the system is in chemical equilibrium: $T = 82\ 393/142.5 = 578$ K or 305 °C.

Thus, at $T > 305$ °C, the reaction of heptane decomposition becomes more probable thermodynamically.

Let us now calculate the values of K_{eq} for various temperatures by Eq. (6.5) and list all our data:

T, K	298	578	800
T, °C	25	305	527
ΔG, kJ/mol	39.904	0	−31.607
$\log K_{eq}$	−6.99	0	2.06
K_{eq}	1.2×10^{-8}	1	114.8

The equilibrium constant for this reaction has the form:

$$K_{eq} = \frac{p(C_4H_8)\,p(C_3H_8)}{p(C_7H_{16})}$$

Assuming x to be the mole fraction of heptane reacted by the instant equilibrium sets in ($\Delta G = 0$), let us express the partial pressures in terms of the mole fractions:

$$p(C_4H_8) = p(C_3H_8) = \frac{x}{1+x}; \quad p(C_7H_{16}) = \frac{1-x}{1+x}$$

because the mixture contains x moles of butene, x moles of propane, and $1 - x$ moles of heptane, altogether $1 + x$.

Introducing these values into the expression for K_{eq}, we find x, i.e. the partial pressures of propane, butene, and heptane, or which is the same, their equilibrium concentrations at different temperatures. We obtain:

Temperature, °C	25	304	527
Concentration, %:			
C_3H_8	0.011	41.0	49.92
C_4H_8	0.011	41.0	49.92
C_7H_{16}	99.978	18.0	0.16

In the above example, we had to do with an endothermic decomposition reaction proceeding with the absorption of heat. In general-

izing, we can conclude that for all endothermic reactions the equilibrium of a reaction shifts from the left to the right, i.e. in the direction of formation of the products, when the temperature is raised *above* a definite limit (at $\Delta G = 0$). Such reactions can be called fundamentally high-temperature ones (Fig. 36*b*). Conversely, the reverse pattern holds for most synthesis reactions such as hydrogenation, alkylation, and polymerization, which are exothermic, and they can be called fundamentally low-temperature ones. When the temperature is lowered *below* a definite limit (at $\Delta G = 0$), their thermodynamic probability grows (Fig. 36*a*).

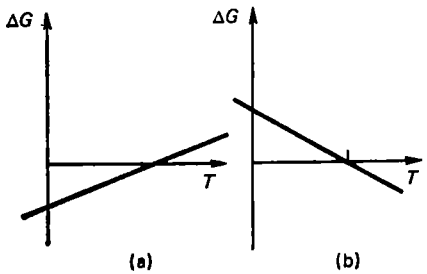

Fig. 36. Temperature dependence of the change in the Gibbs energy for exothermic (*a*) and endothermic (*b*) reactions

For reactions proceeding with a change in volume, the state of equilibrium is affected not only by the temperature, but also by the pressure. The approximate relation between ΔG and the pressure p is expressed by the equation:

$$\Delta G = \Delta G_0 \pm 19.13 \log pT \quad (6.7)$$

where ΔG_0 is the change in the Gibbs energy at the standard pressure of 101 325 Pa.

This matter is solved qualitatively proceeding from the Le Châtelier principle. An increase in the pressure facilitates reactions of hydrogenation, alkylation, polymerization, and others proceeding with a reduction in the volume. Conversely, for reactions involving an increase in the volume (decomposition, dehydrogenation, etc.), the thermodynamic probability grows with a decrease in the pressure. For an isomerization reaction and others proceeding without a change in the volume, the pressure does not affect the values of ΔG and K_{eq}.

Thus, thermodynamic analysis makes it possible to determine the direction of a reversible reaction under various conditions and to calculate the theoretical equilibrium concentrations of the products proceeding from the equilibrium constants. But for the practical embodiment of a reaction, its thermodynamic probability alone is not sufficient. It must proceed at a *rate* suitable for technological purposes, and the required *degree of conversion* must be achieved during the time allotted for the process.

The degree of conversion (yield) can be expressed in terms of the concentration c_0 of the reactant at the initial period of a reaction and the concentration c at the instant τ:

$$y = \frac{c_0 - c}{c_0} \times 100\% \quad (6.8)$$

Most reactions of petroleum hydrocarbons are characterized by low rates and accordingly by substantial activation energies. To increase the rate of a reaction, it is necessary to raise the temperature or employ catalysts. It is general knowledge that for most reactions elevation of the temperature by 10 K increases the rate of a reaction from two to four times. An increase in the degree of conversion of the reactant is achieved exactly by raising the temperature. Cases often occur in practice when even with deterioration of the thermodynamic probability it becomes necessary to raise the temperature to obtain a real yield of the products, although with low equilibrium concentrations, i.e. with a low value of K_{eq} for the given reaction.

The pressure does not affect the rate of monomolecular reactions (decomposition, isomerization, or dehydrogenation) because each molecule in them reacts independently.

For bimolecular synthesis reactions (polymerization, hydrogenation, alkylation), a growth in the pressure increases the possibility of collision of the reacting molecules and therefore increases the reaction rate.

The reactions proceeding in thermal cracking mainly obey first-order equations for which the rate constant k is determined in terms of the concentrations c_0 and c and the reaction time τ:

$$k = \frac{1}{\tau} \ln \frac{c_0}{c} \tag{6.9}$$

The activation energy of cracking reactions, which determines their rate, ranges from 200 to 280 kJ/mol.

The decomposition of hydrocarbons is the predominating type of chemical conversions in destructive processes of petroleum treatment. The thermal stability of hydrocarbons varies and depends both on their molecular mass and chemical structure. It is closely related to the energy of the bonds between the atoms in molecules.

The bond energy is defined to be an amount of energy such that has to be spent for breaking (dissociating) a definite type of bond between atoms. When a bond appears, i.e. when atoms combine into molecules, the system transforms into a more stable state attended by the evolution of heat. The energy of bond formation is therefore positive. In the decomposition of molecules, heat is absorbed, and the bond breaking energy is negative.

Below are given averaged data on the bond energies (in kJ/mol) between carbon atoms and carbon with hydrogen in various classes of hydrocarbons:

H—H	436	C=C	610
C_{aliph}—C_{aliph}	298	C≡C	836
C_{aliph}—C_{ar}	332	C_{aliph}—H	392
C_{ar}—C_{ar}	407	C_{ar}—H	426

One must bear in mind, however, that the C—C and C—H bond energies in molecules are not the same. Their value is affected by the structure of the relevant molecule and the location of the given bond in it. Experimental data reveal, for example, that hydrogen detaches itself the easiest from a tertiary carbon atom $>CH$, with somewhat greater difficulty from a secondary atom $>CH_2$, and with still greater difficulty from a primary one $—CH_3$. The detachment of hydrogen from methane CH_4 is the least probable. In the alkane series C_nH_{2n+2}, the C—C bond weakens appreciably with an increase in the number of carbon atoms in a molecule.

The main types of petroleum hydrocarbons can be arranged in a general form in the following sequence in accordance with their increasing thermal stability: alkanes, cycloalkanes, arenes, cycloalkanoarenes, polycyclic arenes.

6.3. Thermal Transformations of Hydrocarbons

The thermal transformations of petroleum fractions is a very involved chemical process. The feed stock consists of a large number of individual components, and it is impossible to predict or follow the fate of each of these components under the action of high temperatures. The results of a thermal process in practice are appraised by the yields of the target products: gas, gasoline, coke, and also by the group or component composition of the gasolines. But the studying of the thermal transformations of individual hydrocarbons makes it possible to arrive at conclusions on the types of reactions typical of a given class of hydrocarbons.

Transformations of Alkanes. The main kind of thermal transformations for hydrocarbons of this class is decomposition at a C—C bond with the formation of an alkane and an alkene:

$$C_nH_{2n+2} \rightarrow C_mH_{2m} + C_qH_{2q+2}$$

The resulting saturated fragments again decompose into an alkene and an alkane. The alkanes can decompose at all the C—C bonds. The decomposition site depends on the temperature and pressure. When the temperature is higher and the pressure is lower, the site of carbon chain breaking shifts towards the chain end, and the yield of gaseous products is higher. At a temperature of about 450 °C, the chain breaks at its middle. An increase in the pressure also shifts the breaking site toward the centre of a molecule. Hence, cracking under pressure makes it possible to obtain more liquid products and less gas.

In the alkane series, methane CH_4 has the highest thermal stability because it has no C—C bond. The decomposition of methane into carbon and hydrogen is possible only at very high temperatures (about 1500 °C). Ethane and propane decompose at a C—C bond and at a

C—H one (a dehydrogenation reaction):

$$C_nH_{2n+2} \rightarrow C_nH_{2n} + H_2$$

Ethane is more disposed to a dehydrogenation reaction, whereas propane already at 600 °C is more disposed to decompose into ethylene and methane.

The above schemes of the chemical reactions of alkane transformation do not disclose all the complications of the mechanism underlying the process of formation of hydrogen and saturated and unsaturated fragments. Most scientists consider that the thermal transformations of alkanes are of a *chain nature* and observe the free radical theory. Its main doctrines are as follows.

1. Since the dissociation energy of a C—C bond is less than that of a C—H one, the former bond breaks first under the effect of an elevated temperature. As a result, radicals of various molecular masses form, for example,

$$CH_3(CH_2)_5CH_3 \rightarrow C_4H_9\cdot + C_3H_7\cdot$$

A chain reaction is initiated.

It has been proved that at about 600 °C and atmospheric or a reduced pressure, methyl ($CH_3\cdot$) and ethyl ($C_2H_5\cdot$) radicals can exist independently for a brief time. At increased pressures, radicals of a larger molecular mass also acquire this ability. Unsaturated substances with a free valence bond that do not decompose instantaneously into more stable compounds are called **free radicals**. They also include the hydrogen radical $H\cdot$.

2. Radicals of a higher molecular mass that are not stable under given conditions instantaneously decompose again with the formation of a stable alkene and a new radical, including a hydrogen one, for example:

$$\cdot C_5H_{11} \begin{cases} \longrightarrow C_4H_8 + CH_3\cdot \\ \longrightarrow C_5H_{10} + H\cdot \end{cases}$$

The concentration of the free radicals in the reaction mixture grows.

3. The free radicals collide with the reactant molecules and form new radicals:

$$R'H + H\cdot \rightarrow H_2 + R'\cdot$$
$$R'H + R\cdot \rightarrow RH + R'\cdot$$

The chain reaction propagates.

The only result of the collision of a free radical with a feed stock molecule will be the detachment of hydrogen from a saturated hydrocarbon. This detachment will occur from tertiary, secondary, and primary carbon atoms with a different probability, giving birth to radicals varying in their structure. For example, the following reac-

tions are possible when a radical collides with a propane molecule:

$$CH_3CH_2CH_3 + CH_3\cdot \rightarrow CH_3\overset{|}{C}HCH_3 + CH_4$$
$$CH_3CH_2CH_3 + CH_3\cdot \rightarrow CH_3CH_2\underset{|}{C}H_2 + CH_4$$

At 600 °C, the probabilities of the reaction of free radicals with hydrogen at the site of a secondary and of a primary carbon atoms are in the ratio of 1:2. The lifetime of the free radicals is very low, of the order of magnitude of 10^{-3}-10^{-4} s, because during this time they manage to encounter undecomposed feed stock molecules. The activation energy of this type of reactions is 40-80 kJ/mol, i.e. considerably lower than for the direct decomposition of an alkane. Free radicals appear again and again during the propagation of the chain reaction, and thus a very large part of the initial alkane molecules are involved in the reaction. Consequently, the main part of the reaction products is obtained as a result of propagation of a chain reaction via free radicals, and not owing to the direct breaking of the carbon chain. This reaction is only the beginning of a long series of transformations, i.e. its initial impetus.

4. When equilibrium is reached, the probability of free radicals meeting one another becomes equal to that of their colliding with feed stock molecules. This leads to termination of the chain reaction as a result of the reactions proceeding with the formation of stable alkanes:

(a) radical recombination: $CH_3\cdot + CH_3\cdot \rightarrow C_2H_6$;

(b) radical disproportionation: $CH_3\cdot + C_2H_5\cdot \rightarrow CH_4 + C_2H_4$.

As a result, saturated and unsaturated hydrocarbons that are stable at the given temperature, and also molecular hydrogen accumulate in the products.

Transformations of Alkenes. Alkenes are absent in cracking feed stock, but their role in the chemistry of cracking is very great because they always form when hydrocarbons of other classes decompose. Alkenes are characterized by a great diversity of chemical transformations.

Low temperatures and high pressures stimulate reactions of compacting of low-molecular hydrocarbons:

$$nC_nH_{2n} \rightarrow (C_nH_{2n})_n$$

An increase in the pressure extends polymerization. But with elevation of the temperature, the thermodynamic probability of polymerization drops sharply, and equilibrium shifts in the opposite direction. The longer the residence time of the feed stock in the zone of high temperatures, the deeper is the decomposition of the products of compacting. Under the usual conditions of thermal cracking (about 500 °C, 4 MPa), the alkenes formed in the decomposition of alkanes

or as a result of the compacting of low-molecular alkenes mainly decompose.

An analysis of the energy features of an alkene molecule reveals that the C—C bond in the 2nd (β) position relative to the double bond has the lowest dissociation energy:

$$\begin{array}{ccccccc} -C & C-C=C-C & C-C- \\ 3 & 2 \quad 1 \quad 1 & 2 \quad 3 \quad 4 \\ (\gamma) & (\beta) \quad (\alpha) \quad (\alpha) & (\beta) \quad (\gamma) \quad (\delta) \end{array}$$

This rule (the **beta-bond rule**) determines the most probable site of decomposition in a carbon chain.

The mechanism of alkene decomposition, like that of alkanes, is of a chain nature. Primary decomposition at a 2nd position bond gives birth to two radicals. Thus, for pentene, we have:

$$CH_3-CH_2-CH_2-CH=CH_2 \rightarrow CH_3-CH_2\cdot + \cdot CH_2-CH=CH_2$$

Further:

$$C_5H_{10}+R \rightarrow RH+CH_3CH_2\underset{|}{C}HCH=CH_2$$

The radical $C_5H_9\cdot$ is very unstable and immediately decomposes into butadiene and a methyl radical:

$$CH_3CH_2\underset{|}{C}HCH=CH_2 \rightarrow CH_2=CHCH=CH_2+CH_3\cdot$$

The chain reaction propagates further via the methyl radical. This mechanism is a good explanation of the production of butadiene and methane from pentene:

$$C_5H_{10} \rightarrow C_4H_6+CH_4$$

At the higher temperatures (600-700 °C) characteristic of the pyrolysis process, similar reactions also proceed for the lower alkenes with from two to four carbon atoms. Thus, ethylene yields butadiene and hydrogen. The conditions under which pyrolysis is conducted also facilitate reactions of alkene dehydrogenation:

$$C_4H_8 \rightarrow C_4H_6+H_2$$

Owing to the above reactions, alkadienes accumulate in the pyrolysis products. These hydrocarbons are very prone to compaction at temperatures about 700 °C by polymerization (a) and condensation

with alkenes (b) with the formation of cyclic hydrocarbons:

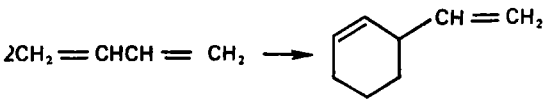

(a)

Vinylcyclohexene

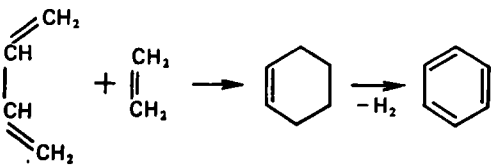

(b)

The cycloalkenes obtained in condensation are readily dehydrogenized to arenes. These reactions are the main way of forming arenes in pyrolysis.

Transformations of Cycloalkanes. Cycloalkanes are characterized by the following types of transformations at high temperatures:

dealkylation or shortening of the side alkyl chains;

dehydrogenation of a ring with the formation of cycloalkenes and arenes

partial or complete decyclization of polycyclic cycloalkanes after dealkylation;

decomposition of monocyclic cycloalkanes.

Dealkylation is a reaction similar to the decomposition of alkanes. The thermal stability of side alkyl chains is substantially lower than that of a ring. This is why breaking of the chains is the main direction of primary decomposition of alkylcycloalkanes. A growth in the pressure prevents dealkylation. A shortened side chain, like the detached fragment, can be either saturated or unsaturated. In exhaustive dealkylation, a cyclic radical is saturated with hydrogen that is always present in the decomposition products.

Dehydrogenation is a reaction proceeding at higher temperatures. It results in the accumulation of cycloalkenes and arenes in the cracking and pyrolysis products. The reaction is promoted by a reduced pressure:

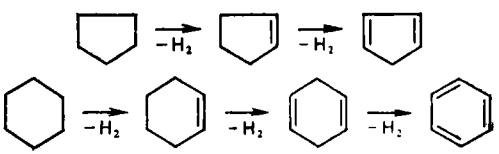

Dicyclic cycloalkanes in this reaction can initiate hydrocarbons of the tetralin and naphthalene series. In pyrolysis, the dehydrogenation of six-membered cycloalkanes in addition to diene synthesis

is the most probable path of deep aromatization of the feed stock.

Decyclization of polycyclic cycloalkanes leads to the consecutive simplification of the molecules and is attended by dealkylation. These transformations can be shown schematically as follows:

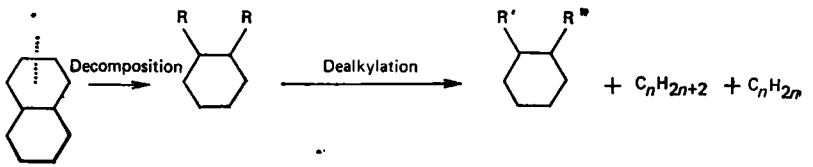

The *decomposition* of monocyclic cycloalkanes (cyclopentane, cyclohexane) occurs at 550-600 °C with the formation of two alkenes:

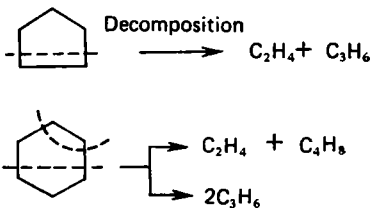

At 700-800 °C, cyclohexane decomposes in a different way, with the formation of an alkene and alkadiene:

$$C_6H_{12} \rightarrow C_2H_6 + C_4H_6$$

The reactions of thermal decomposition of cycloalkanes proceed according to a molecular mechanism instead of a radical-chain one. The decomposition reaction competes thermodynamically and kinetically with a dehydrogenation reaction. This is why both unsaturated and aromatic hydrocarbons can be found in comparable amounts in cracking products.

Transformations of Arenes. Arenes are the most thermally stable hydrocarbons. Consequently, they accumulate in the liquid cracking products in amounts that grow with the process temperature.

Arenes with long side chains are capable of dealkylation. A side chain usually breaks between the first and second carbon atoms in the chain, i.e. at the 2nd position from the ring carbon. Hence, monomethylated aromatics are the chief products of dealkylation.

Unbranched hydrocarbons (benzene, naphthalene, anthracene, etc.), like alkylated hydrocarbons with short side chains, do not virtually decompose. The only direction of their transformations is condensation with the evolution of hydrogen. The result is the accumulation of polycyclic hydrocarbons. This reaction has a radical-chain mechanism, which is confirmed by the results of experimental research. Initially aromatic radicals form as a result of the reaction of benzene

(naphthalene, anthracene, etc.) with a hydrogen atom:

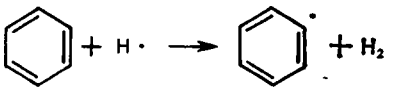

They subsequently recombine, which is exactly what results in the formation of condensed molecules. Carboides (coke) form owing to the development of the condensation reactions of various cyclic hydrocarbons. The gradual increase in the molecular mass and carbon content and the loss of hydrogen as a result of condensation of the aromatic structures can be depicted schematically as follows (using naphthalene as an example):

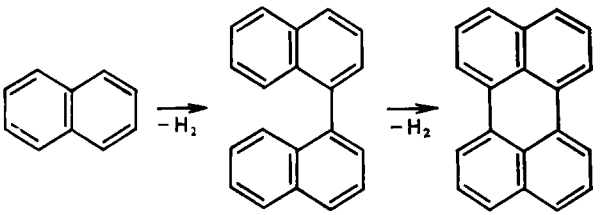

Naphthalene Dinaphthyl Perylene

These and similar reactions as they extend lead to the formation of solid carboides containing a minimal amount of hydrogen. Consequently, petroleum coke is not a modification of carbon obtained when hydrocarbons decompose into elements, but has a hydrocarbon structure.

Transformations of Sulphur-Bearing Compounds. The sulphur-bearing compounds present in the feed stock either decompose with the evolution of hydrogen sulphide, mercaptans, and hydrocarbon fragments, or, owing to their thermal stability (thiophenes and their like) accumulate in the more high-molecular products.

The above consideration of all the chemical transformations of hydrocarbons of various structures allows us to conclude that the following main reactions occur in the thermal processing of petroleum feed stock: decomposition, dealkylation, dehydrogenation, polymerization, cyclization of alkenes, decyclization of cycloalkanes, destructive condensation of alkenes, condensation of alkanes to alkadienes, condensation of arenes, and reactions of deep compacting up to coke.

6.4. Effect of Various Factors on the Thermal Cracking Process

Treatment in any thermal process results in the formation of gases, benzene, middle distillate fractions (kerosene and gas oil), heavy residual fractions, and coke. The yield, relation between the reaction

products, and the properties of these products depend on many factors, but the main role is played by the composition of the feed stock, the temperature, pressure, and duration of the reaction.

Process Parameters. *Feed Stock Composition.* Under identical cracking conditions, the rate of a reaction grows with elevation of the feed stock boiling point. This feature is explained by the different thermal stability of hydrocarbons. High-molecular alkanes, and also arenes with a long side alkyl chain are less stable thermally than low-molecular hydrocarbons. Hence, less decomposition products will form when the latter are cracked.

Feed stock with a high arene content decomposes at a lower rate than paraffinic stock. The condensation processes occurring in the decomposition of aromatized stock result in the formation of coke.

Feed stock containing mainly alkanes is preferable for thermal cracking plants because they decompose more readily with the formation of target products such as gas, gasoline, and middle distillates.

At the same time, a little coke forms in the decomposition of this kind of stock. The formation of coke in thermal cracking is known to be undesirable because it affects the duration of continuous running of the plants. Owing to the accumulation of coke in the furnace coils, thermal cracking plants have to be shut down quite frequently for burning out the coke.

Conversely, stock containing more arenes is preferable for coking plants.

Temperature and Duration of a Process. These factors affecting the yield and quality of thermal cracking products are interchangeable at definite temperatures. By increasing the cracking temperature and lowering the residence time in the zone of high temperatures, one can obtain the same extent of stock decomposition as at a milder temperature, but a greater duration of cracking.

The thermal decomposition of hydrocarbons begins at 380-400 °C. The cracking rate grows rapidly with elevation of the temperature. Elevation of the cracking temperature at a constant pressure and constant degree of conversion leads to an increase in the content of light components and to a reduction in the yield of heavy fractions and coke. The gas yield grows noticeably with elevation of the temperature, the content of unsaturated hydrocarbons in it also growing.

Pressure. The pressure does not appreciably affect the rate of cracking and the gasoline yield. But an increase in the pressure makes it possible to raise the boiling point of the feed stock and cracking products, and change the phase state in the cracking zone. The primary reactions (decomposition, dehydrogenation) do not depend on the pressure, while the secondary ones (polymerization and condensation) are accelerated with an increase of the pressure. This is why the products obtained in cracking under a high pressure contain less unsaturated hydrocarbons than in cracking under a low one.

Thus, in the gases of thermal cracking conducted at pressures exceeding 4 MPa and below 0.5 MPa, the volume content of unsaturated hydrocarbons is 15 and 45%, respectively.

Thermal cracking can be performed in the vapour, liquid, and mixed phases. Gasoline and kerosene-gas oil fractions for which the cracking temperature is higher than the critical one are generally cracked in the vapour phase. An increase of the pressure in vapour-phase cracking diminishes the volume of the feed stock vapour and cracking products, and this makes it possible to increase the capacity of the plant or increase the residence time of the feed stock in the reaction zone.

The pressure does not appreciably affect the liquid-phase cracking of heavy kinds of stock (fuel oil, residual stock). In mixed-phase cracking, a higher pressure facilitates the homogenization of the feed stock—the gas partly dissolves in the liquid and reduces its density, while the gas phase itself becomes denser. Such a change in the phase conditions increases the residence time in the cracking zone and decreases the losses in the form of a gas.

Heat of Thermal Cracking Reaction. In thermal cracking, decomposition and condensation reactions proceed simultaneously. The former occur with the absorption of heat, and the latter, with evolution of heat.

The overall heat effect depends on which of these reactions predominate. The overall heat effect of thermal cracking is negative, and therefore heat has to be supplied from outside.

The heat of a thermal cracking reaction is expressed per kilogramme of the feed stock or per kilogramme of the formed gasoline. It is 1.25-1.47 MJ/kg of gasoline in the cracking of gas oil and 0.12-0.25 MJ/kg of feed stock in the viscosity cracking of fuel oil.

Degree of Conversion. The degree of conversion in thermal cracking is characterized by the gasoline yield relative to the feed stock. The degree of conversion is limited by the formation of coke and gas.

Coke formation depends on the properties of the cracking stock and on parameters of the process such as the temperature and residence time in the reaction zone. Coke formation limits the extent of cracking for heavy and medium kinds of stock. The coke yield grows with increasing temperature and residence time of the stock in the reaction zone.

In the cracking of light kinds of stock, only a small amount of polymerization products forms, and the gasoline yield is chiefly affected by gas formation. The gas yield in cracking is initially proportional to the gasoline yield, but as the extent of the process grows, the relative yield of gas increases. In very deep cracking, the rate of formation of gas from the gasoline begins to exceed the rate of gasoline formation.

Coke and gas formation do not make it possible to achieve the max-

imum gasoline yield in industrial plants, and therefore part of the cracking stock remains untransformed.

The gasoline yield in the cracking of heavy distillate stock does not exceed 50% of the maximum possible one.

The unconverted stock is returned for repeated cracking to increase the yield of the target product. The repeated cracking can be performed in a separate apparatus (**once-through cracking**) or with mixing of the recycle and fresh stock (**recycle craking**).

6.5. Feed Stocks, Products, and Parameters of Thermal Cracking

Most of the more than 60 thermal cracking plants in operation in the USSR produce an additional amount of light-end products from heavy fractions; some plants are intended for producing carbon black stock and stock for electrode coke plants. Other plants operate under thermal reforming conditions to increase the octane number of straight-run gasoline and ligroin fractions.

Stocks. The choice of the stocks for thermal cracking plants depends on the conditions under which they are operated. Plants intended for the production of an additional amount of light-end products process the residues of atmospheric and vacuum distillation (fuel oil and residual stock), while plants intended for the production of carbon black stock process highly aromatized distillate fractions (gas oils of catalytic cracking and coking, extracts of the selective purification of oils). Thermal cracking plants producing coking stock are supplied with the vacuum distillates from atmospheric-vacuum plants, while thermal reforming plants operate on a mixture of gasoline and kerosene.

Products. Thermal cracking yields gas, gasoline, gas oil, and cracking residue.

The *gas* of thermal cracking contains alkanes (from methane to butane) and alkenes (from ethylene to butylenes), hydrogen, and hydrogen sulphide. The ratio of the gas components depends on the temperature and pressure of the process. The composition of thermal cracking gas is given in Chap. 8. The thermal cracking gas is delivered for further processing to a gas-fractionating plant.

The *gasolines* produced by thermal cracking differ in their hydrocarbon composition from the straight-run ones. If the latter mainly contain alkanes and cycloalkanes, then cracked gasolines contain many unsaturated and aromatic hydrocarbons. The octane number of cracked gasolines is 68-70 according to the motor method.

Cracked gasolines have a low chemical stability. The alkenes and alkadienes contained in them condense, polymerize, become oxidized, and form gums under the effect of light, heat, and dissolved oxygen. The presence of gums and polymers explains the increased ten-

dency of cracked gasoline to form carbon deposits in engines. The formation of gums is retarded by introducing oxidation inhibitors into gasolines (see Chap. 3).

The sulphur content in cracked gasolines from sour petroleums reaches 0.5-1.2%, which is from five to ten times greater than the content tolerated by the standard for motor gasolines. The active compounds—hydrogen sulphide and mercaptans, are especially dangerous. Cracked gasolines are purified from hydrogen sulphide by caustic washing.

Thermally cracked gasolines are used at present as a component of low-octane motor fuels. Processes of deep hydrofining have been developed after which thermally cracked gasolines can be used as the feed stock for catalytic reforming plants.

The fraction boiling at 200-350 °C is called thermally cracked *gas oil.* It is used as a component of bunker, gas turbine, and furnace fuels. After hydrofining, the gas oil can be used in diesel fuel.

Cracking residue is the fraction boiling above 350 °C. Like straight-run fuel oil, it is used as a furnace fuel for heat power plants, marine vessels, and furnaces of industrial enterprises. The quality of the cracking residue as a furnace fuel is higher than that of the straight-run stock because the cracking residue has a somewhat higher enthalpy (heat content), and a lower pour point and viscosity. Of special importance is that the cracking residues have a reduced viscosity. This facilitates the transportation of furnace fuels through the system of feeding pipelines and their atomization in the nozzles.

Flow Diagram. The diagram chosen for a thermal cracking plant depends on the feed stock and the products to be obtained. All plants have a pipe furnace for heating the stock to the required temperature and supplying the reaction heat. To ensure the required degree of conversion, most plants, especially when processing heavy stock, have special reactors in which the stock is held for a definite time at the reaction temperature. Modern thermal cracking plants generally employ cracking with recycling. Fuel oil cracking plants using a two-coil furnace diagram have become the most popular.

Figure 37 contains a block diagram of the stock and product flows in a two-coil thermal cracking plant. A glance at the diagram reveals that the feed stock of the deep cracking furnace consists of the fraction up to 350 °C separated from the straight-run fuel oil and the 200-350 °C fraction obtained by mild cracking of the residue above 350 °C. The heavy feed stock contains no fractions boiling below 350 °C, and the only source for feeding the mild cracking furnace is the mild-cracking gas oil fraction whose yield is not great. It is more rational in this case to use single-coil operation of the plant.

In both furnaces (mild and deep cracking) of a two-coil plant, the unconverted part of the stock is recycled to increase the efficiency of processing.

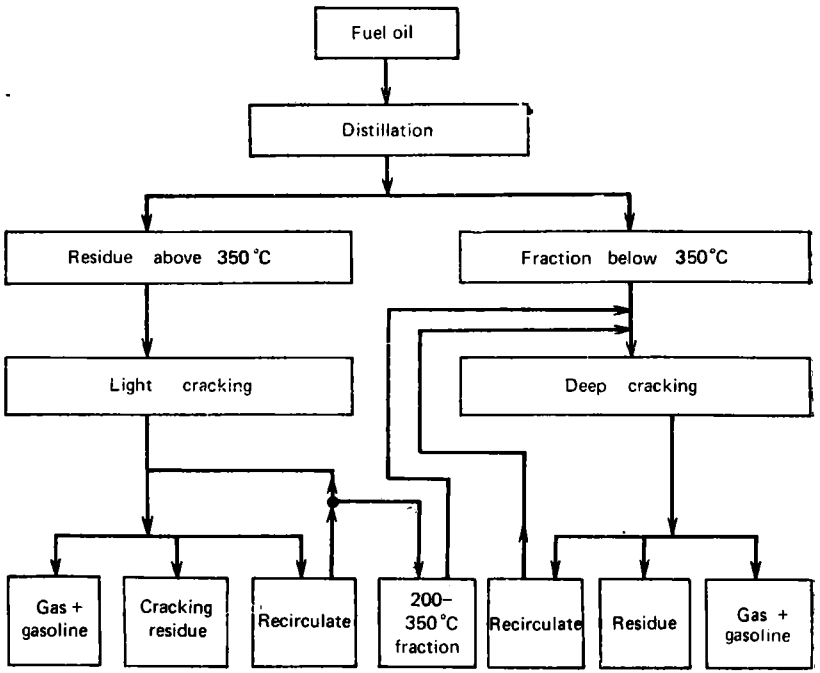

Fig. 37. Two-coil thermal cracking

The ratio of the amount of the recycle stock and fresh stock is called the recycle factor K_1, while the ratio of the entire feed stock of a cracking furnace to the fresh stock is the loading factor K_2. It can be seen that $K_2 = K_1 + 1$.

The greater the depth of cracking during a single pass of the stock, the smaller is the recycle factor and the higher is the capacity of the plant with respect to fresh stock. But an increase in the depth of cracking during a single pass results in lowering of the gasoline yields, the formation of more gas and coke, and in an increase in the volatility of the light-end gasoline fraction.

Figure 38 presents a flow diagram of a thermal cracking plant. The feed stock is delivered by pump *1* into exchanger *2*, where it is heated at the expense of the heat of the cracking residue and is then divided into two streams. One of them flows into the bottom of rectification column *3*, while the second one flows into the top of low-pressure evaporator *9*. The stock stream flowing into evaporator *9* is enriched there with heavy gas oil fractions and is fed by pump *10* into column *3*. The stock from the bottom of column *3* is fed by furnace pump *7* into heavy stock furnace *11*.

Column *3* is divided into two parts by a "one-way" plate through

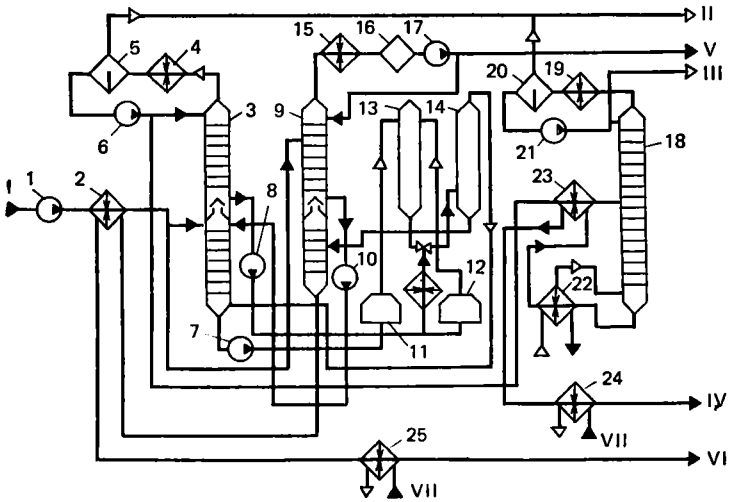

Fig. 38. Flow diagram of a thermal cracking plant:

1, 6, 7, 8, 10, 17, 21—pumps; *2, 23*—heat exchangers; *3, 18*—columns; *4, 15, 19*—condensers and coolers; *5, 16, 20*—tanks; *9, 14*—evaporators; *11, 12*—pipe furnaces; *13*—reaction chamber; *22*—boiler; *24, 25*—coolers; *I*—feed stock; *II*—gas; *III*—stabilizer overhead; *IV*—stable gasoline; *V*—gas oil fraction; *VI*—cracking residue; *VII*—circulation water

which the vapour from the bottom part passes into the top one. On the other hand, no liquid gets into the bottom part from the top one but accumulates on the one-way plate, is picked up by pump *8* and fed for deep cracking into mild feed stock furnace *12*.

Several problems are solved simultaneously by the preliminary feeding of the stock into the rectification column and mixing it with the reaction products, namely, the heat of the reaction products is utilized, the light-end fractions are distilled from the stock, and the reaction products are cooled.

The cracking products withdrawn from furnaces *11* and *12* are combined and delivered into reaction chamber *13*, whence they flow into high-pressure evaporator *14*. Here the vapour-liquid mixture of the cracked products is divided into its vapour and liquid parts. The liquid part (cracking residue) flows by gravity into low-pressure evaporator *9* in which the gas oil fraction vapour separates because of the low pressure. Like column *3*, evaporator *9* is divided into two parts by a one-way plate. The gas oil fraction vapour that separates from the cracking residue in the bottom part of evaporator *9* flows through the one-way plate into the top part where it meets the counterflowing liquid stock. Contact with this stock causes the gas oil fraction vapour to condense partially.

The uncondensed part of the gas oil is withdrawn from the top of evaporator *9* and flows through condenser and cooler *15* into reflux

tank *16*. The gas oil is returned from the latter for spraying in evaporator *9*, while the remaining amount is withdrawn from the plant.

The vapour phase of the reaction products is directed from evaporator *14* into rectification column *3*. The gasoline fraction vapour and gas emerge from the top of column *3*. After condensation in condenser *4*, the mixture of condensed gasoline and gas flows into separator *5* from which the gas and gasoline are withdrawn separately. The gasoline is stabilized in column *18* and is discharged from the plant.

The side-cut fraction of column *3*—a mixture of the light part of the feed stock with the unreacted gas oil—is directed, as indicated above, into furnace *12*, while the bottom product—a mixture of the heavy part of the stock with the recycled cracking residue—flows into furnace *11*.

Technological Conditions. Below are given the technological conditions of a thermal cracking plant operating with the production of light distillates and gas from fuel oil:

	Temperature, °C	Pressure, MPa
Heavy stock furnace *11*:		
inlet	390-410	4.5-5.0
outlet	460-480	2.2-2.7
Mild stock furnace *12*:		
inlet	290-320	5.5-6.5
outlet	530-545	2.2-2.8
Rectification column *3*:		
bottom	390-410	0.8-1.2
stock accumulator	280-320	
top	210-220	
Low-pressure evaporator *9*:		
bottom	400-415	0.15-0.3
stock accumulator	280-300	
top	120-200	

More rigorous conditions are employed in plants producing stock for the manufacture of technical carbon (carbon black)—the temperature at the outlet from furnace *11* is increased to 500 °C, and at the outlet from furnace *12* to 550 °C. The pressure is increased to 5.6 MPa in furnace *11* and to 7.0 MPa in furnace *12*.

A thermal cracking plant is characterized by a high pressure in the equipment. This makes it possible to maintain higher temperatures in the columns and evaporators. This, in turn, makes it possible to raise the temperature at which the reflux enters a furnace and reduce the consumption of fuel for heating it to the cracking temperature. The size of the equipment is reduced owing to the increased pressure.

To retard the proceeding of the cracking reactions, the cooled product at 160-165 °C is fed into the line of the vapour and liquid mixture at the outlet from a pipe furnace or the separate reaction chamber coil.

Material Balance. The material balance of a thermal cracking plant when operating under conditions of producing light-end products from the fuel oil of sour petroleum (I), producing stock for the production of technical carbon (II), and of the viscosity breaking of tar of West Siberian petroleum (III) is given below:

	I	II	III
Feed stock	100.0	100.0	100.0
Products:			
Gas	4.5	5.2	2.3
Stabilizer overhead	1.8	3.1	3.1
Stable gasoline	14.8	19.4	9.0
Gas oil fraction	2.4	—	—
Thermal gas oil	—	31.5	—
Cracking residue	75.7	40.1	84.8
Losses	0.8	0.7	0.8
Total	100.0	100.0	100.0

6.6. Basic Equipment and Operation of Thermal Cracking Plants

The basic equipment of a thermal cracking plant includes pipe furnaces, reaction chambers, evaporators, and rectification columns.

The **pipe furnaces** are intended not only for heating and partial or complete evaporation of the feed stock, but also for conducting chemical reactions in them. In this respect, they differ from the furnaces of distillation plants.

A pipe furnace of a cracking plant has a heating zone and a reaction zone, but there is no exact boundary between the zones because decomposition of the feed stock is attended by its further heating. The section of the pipes at which the cracking reaction terminates is called the **reaction coil**. The latter is accommodated in the radiant part of the furnace because the heat intensity of the pipes here is two or three times greater than in the convection part, and, consequently, a sharp reduction in the coil size can be achieved.

The cracked products emerging from the furnace carry a lot of heat—they have a high temperature. This heat is utilized for deepening the cracking reactions. The vapour is directed into a separate **reaction chamber**—a hollow cylindrical apparatus two or three metres in diameter and 10-15 metres high.

The vapour is admitted into the reaction chamber from the top, and is discharged from the bottom. The chamber is constantly filled with the vapour of the mixture being cracked, and the volume of the liquid in which the most readily coking products are concentrated is not large.

Since the reaction chamber is not heated and the cracking reaction proceeds with the absorption of heat, the temperature at the chamber

outlet is 30-40 °C lower than at its inlet. Owing to the quite high volume of the chamber, the product can be in it for a long time (up to 100 seconds), and this facilitates the degree of cracking. Operating experience reveals that up to 25% of the total amount of the gasoline and gas forms in the reaction chamber.

From the latter, the vapour and liquid mixture of the cracked products flows into the **high-pressure evaporator**, designed as a hollow apparatus two or three metres in diameter and 15-18 metres high. Since the phases in this apparatus are separated under a high pressure, the residue withdrawn from the bottom of the evaporator contains a large amount of dissolved gas oil and gasoline fractions. The light-end fractions are separated in the **low-pressure evaporator** before which a reducing device lowers the pressure from 0.8-1.2 to 0.15-0.3 MPa.

The low-pressure evaporator is provided with rectification plates. Its purpose is not only to distill the light components from the cracking residue, but also to heat the stock at the expense of the cooling and condensation of the vapour of the evaporated fractions.

The technological conditions in the plant are maintained in accordance with technological regulations and the flow sheet.

The operation of a thermal cracking plant is controlled according to the readings of instruments, on the basis of the results of analysis of the feed stock, cracking residue, and distillates. The stock is analysed for its content of water and sulphuric-acid resins, carbon residue, and specific gravity. The carbon residue and the content of sulphuric-acid resins show the ability of the stock to form coke in the furnace pipes and the reaction chamber. If a stock with a higher resin content is delivered for processing, the cracking temperature must be lowered within the limits established by the flow sheet.

The proper maintenance of the technological conditions makes it possible to prolong the duration of continuous running of the plant.

The duration of continuous operation, which previously did not exceed 40-60 days, has grown substantially and has reached 90-150 days. Thermal cracking plants have to be shut down to clean them from coke. The coke deposited in the furnace pipes reduces the free section of the coil, which increases the pressure at the furnace inlet. Appreciable coke deposits are observed in the bottom part of the reaction chamber, the evaporators, and in the cracking residue pipelines. Previously, the coke was removed mechanically using cutters and strikers operated by compressed air. At present, most plants use a more economical method—burning out in a steam and air stream.

To diminish the coke deposits, a small amount of a turbulizing agent—water, is introduced into the feed stock at thermal cracking plants before the furnace. When it gets into the stream of the stock having a temperature of 390-400 °C, the water immediately evapo-

rates. The volume of the vapour phase grows sharply, the stock stream is mixed intensively, and its velocity grows. It is especially important that the velocity of the boundary film at the pipe wall increases because it is the main source of coke formation.

6.7. Types of Petroleum Residue Coking Plants. Feed Stock and Products

Types of Plants. Petroleum residues are coked on an industrial scale at present in three ways: in horizontal heated stills (a batch process), in unheated coke chambers (a semicontinuous process), and in a fluidized bed of a coke heat-carrying agent (a continuous process).

Coking in stills is the oldest of the coking processes. At Soviet refineries, plants of this type were erected since the end of the 1920's. The main unit of a plant is the coke still—a horizontal cylindrical apparatus heated by an open flame. In their technical level, coking plants using stills have become obsolete, but some of them are still in use.

In *batch coking*, the decomposition products are continuously removed from the reaction zone, while the residue gradually becomes heavier and transforms into coke. The latter does not practically contain volatile substances and does not require additional calcination. Special kinds of coke that cannot be obtained by other methods are produced in stills from cracking residues and pyrolysis resins.

Coking in unheated chambers, or *delayed coking*, has become quite popular at present throughout the world. Delayed coking plants produce the main amount of petroleum coke.

The delayed coking feed stock is heated in a pipe furnace to 500 °C and is directed into a hollow vertical cylindrical coke chamber (reactor). The stock resides a long time in the chamber and turns into coke at the expense of the heat it has accumulated. Streams of the light distillates are withdrawn from the top of an operating chamber. When a chamber is filled with coke up to 70-90% of its capacity, the stock stream is switched over to another chamber, and the coke is discharged from the disconnected one.

Delayed coking is a batch process as regards the discharging of the coke and a continuous one as regards the supply of the stock and the withdrawal of the distillate products.

In *coking in a fluidized bed*, the heated stock comes into contact with an inert heat-carrying agent heated to a higher temperature and is coked on the surface of this agent in the reaction apparatus. A part of the heat-carrying agent with the coke deposited on it is continuously removed from the reaction apparatus into the regenerator. Here part of the coke is burned out and the evolved heat is

used for heating the heat-carrying agent up to the required temperature. It is then recycled to the reaction zone.

Since the main amount of heat needed for coking is communicated to the stock when it comes in contact with the heated agent, the stock can be heated to a lower temperature than in delayed coking before being fed into the reactor. This facilitates the processing of the most highly viscous, resinous products whose heating in pipe furnaces leads to rapid coking of the coils.

Powdered coke with a particle size up to 0.3 mm is the heat-carrying agent in continuous coking plants, and coking occurs in the fluidized bed of the agent.

The principle of pneumatic transportation is employed to transport the coke heat-carrying agent. The driving force is a stream of vapour or gas that picks up the coke particles and carries them along. Pneumatic transportation systems in a rarefied layer or in a dense layer can be employed.

Three processes occur simultaneously in continuous coking in a fluidized bed, namely, coking proper attended by the formation of decomposition and condensation products, calcination of the coke owing to which the volatile matter is removed from it, and, finally, secondary reactions of decomposition and condensation of the coking products in the vapour phase.

The high temperature of the coking heat-carrying agent leads to evaporation of the decomposition products and their removal from the surface of the coke particles. The probability of the formation of products of a secondary origin diminishes. This is why the yield of coke in continuous coking is lower than in delayed coking.

Industrial plants using coking in stills and delayed coking are in operation in the USSR. The process of continuous coking or, as it is sometimes called, thermocontact coking, is being studied in detail in a pilot plant.

Coking Feed Stock. High-molecular petroleum residues are subjected to coking. They include tars, the cracking residues of thermal cracking, asphalts and extracts from oil-producing plants, and pyrolysis resins. The main indices of stock quality are the chemical composition (the content of resins, oils, asphaltenes, sulphur), the coking properties, and the content of mechanical impurities.

The residues delivered for coking consist of high-molecular hydrocarbons, resinous and asphaltenic substances, carbenes, and carboides. The ratio between the stock components depends on the origin of the petroleum and the conditions of the process from which the residue was obtained. With respect to the sulphur content, sweet and sour stocks are distinguished. Coke containing not over 1.5% of sulphur is obtained from the sweet stock.

For the most widespread kinds of stock (tars, fuel oils, cracking residue), the ratio between the sulphur content in the coke and the

stock is 1.2-1.9, but it is general knowledge that in the coking of some petroleum fractions of a secondary origin coke is produced containing even less sulphur than the stock did.

The main consumers of petroleum coke need the sweet product, therefore residues containing not over 0.5-0.8% of sulphur should be delivered for coking. Flow diagrams have been developed of plants that can produce coke from sour stock, but the cost of the coke produced by them is considerably higher than of the coke manufactured from sweet residues.

The tendency of a stock to form coke is characterized by its **carbon residue**, which is determined under standard conditions. The carbon residue and, consequently, the yield of coke in coking is higher when the stock contains more resinous and asphaltenic substances. It is economically expedient that the carbon residue of a stock be at least 10%. But if the stock contains too much resins and asphaltenes and the carbon residue exceeds 20%, the result is rapid coking of the stock heating furnaces and frequent shutdowns of the plant.

Composition and Properties of Products. The gas in its composition is similar to that obtained in thermal cracking, but it contains more saturated hydrocarbons. Elevation of the coking temperature increases the content of unsaturated hydrocarbons in the gas.

Thus, when the coking temperature is raised from 490 to 510 °C, the alkene content grows from 16-18 to 22-25%. The composition of coking gas is given in Chap. 8.

The *gasoline* contains many unsaturated hydrocarbons and sulphur, which hinders its blending into commercial gasolines without preliminary improvement. The most promising variants of improving the quality of gasolines are deep hydrogenation in the pure form or in a mixture with straight-run gasoline with the subsequent reforming of the hydrogenate, and hydrogen treatment in a mixture with straight-run diesel fractions.

The *light gas oil* is employed in the production of furnace and gas-turbine fuels. After hydrofining, it can be blended into diesel fuel.

The *heavy gas oil* is delivered to thermal cracking plants producing stock for the manufacture of technical carbon (carbon black), or is blended into furnace fuel.

Petroleum coke is a solid porous black product. It is employed for producing the anode compound in the aluminium industry, graphitized electrodes for the steel industry, and in the production of carbon disulphide, calcium and silicon carbides.

Special grades of coke are used as a material for the fabrication of chemical apparatus operated under conditions of action of aggressive media.

The coke yield in coking is usually appraised by Conradson's carbon residue index, which authentically estimates the coke-form-

ing potential of a stock under batch coking conditions at atmospheric pressure. In delayed coking, the increased pressure and recirculation of the heavy distillates cause an additional amount of coke to form. The coke yield Y in delayed coking is determined by the formula

$$Y = BC \tag{6.10}$$

where C is Conradson's index, and $B = 1.5\text{-}2$.

The basic indices of coke quality are the content of sulphur, ash, moisture, volatile matter, the granulometric composition, and the mechanical strength. As regards their sulphur content, cokes are divided into sweet (up to 1.0%), moderate-sulphur (up to 1.5%), sulphur (up to 4.0%), and sour (over 4.0%) ones. In their granulometric composition, cokes are divided into lump (the fraction with lumps larger than 25 mm in size), nut (the 6-25-mm fraction), and fine or breeze coke (under 6 mm in size), and in their ash content, into low-ash (up to 0.5% of ash), moderate-ash (0.5-0.8%), and high-ash (over 0.8%) cokes.

Table 7 presents information on the requirements to petroleum cokes produced from sweet stock in stills and delayed coking plants. The still plants produce cokes of grades КН, КНКЭ (cracking elec-

Table 7. **Requirements to Petroleum Cokes**

Index	Coke of still plants				Delayed coking coke with lump size		
	From cracking residue		From pyrolysis pitch		over 25 mm КЗ-25	from 6 to 25 mm КЗ-6	up to 6 mm КЗ-0
	КНКЭ	КН	КНПЭ	КНПС			
Content of driving water, %, not over	3.0	3.0	3.0	3.0	3.0	3.0	3.0
Ash content, %, not over	0.6	0.5	0.3	0.4	0.5-0.6	0.7	0.8
Sulphur content, %, not over	0.8	1.0	1.0	0.4	1.3-1.5	1.5	1.5
Yield of volatile matter, %, not over	7.0	7.0	6.5	7.0	7.0-9.0	9.5	10
Attrition, %, not over	7.0	—	13	13	—	—	—
Content of lumps less than 25 mm in size, %, not over	4	4	4	4	10	—	—

Table 8. **Properties of Cokes Produced by Delayed Coking from Various Kinds of Feed Stock**

Index	Residue stock of Kotur-Tepe petroleum	Cracking residue of Volgograd petroleums	Cracking residue of Tatar petroleums	Residue stock and asphalt of Fergana petroleums
Feed Stock				
Specific gravity d_4^{20}	0.958	0.920	1.026	0.993
Carbon residue, %	9.2	6.5	21.2	14.3
Content, %:				
sulphur	0.47	0.55	2.92	0.62
ash	0.08	0.10	0.12	0.10
Group cómposition, %:				
total oil	68.6	83.0	58.5	67.0
including paraffin waxes	5.9	—	—	—
resins	5.9	14.0	26.9	25.5
asphaltenes	29.9	2.5	14.4	7.5
carbenes and carboides	—	0.3	0.2	—
Coke				
Yield of fractions, %				
above 25 mm	41.5	35.7	45.0	45.0
below 25 mm	58.5	64.3	55.0	55.0
Content, %:				
sulphur	0.52	0.56	4.0	0.92
ash	0.43-0.5	0.25-0.47	0.46-0.49	0.38-0.42
volatile matter	8.7-10.2	8.0-9.5	6.8-7.2	6.8-9.3
Mechanical strength, MPa	4.0-5.7	3.5-4.6	5.3-6.0	9.0

trode), КНПЭ (pyrolysis electrode), and КНПС (pyrolysis special), and the delayed coking plants produce cokes of grades КЗ-25, КЗ-6, and КЗ-0. The quality of the coke, especially as regards indices such as the content of sulphur, volatile matter, and ash, depends on the feed stock quality. Table 8 shows how the quality of the stock affects the technical characteristics of coke produced by delayed coking.

The coke to be employed in the production of electrodes requires additional processing—calcination at 1200-1300 °C. This is performed at the refinery immediately after production of the coke, or at the consumer's facilities. Calcination removes the volatile matter, lowers the electrical resistance, and eliminates shrinkage phenomena. The calcination kilns at aluminium and electrode plants are intended only for coke with a particle size exceeding 25 mm; coke fines, which form about 50% of the coke produced by delayed coking, cannot be calcined in these kilns. At present, coke fines are calcined in the compartment kilns previously employed for producing artificial gas from combustible shale at shale-processing enterprises.

6.8. Flow Diagrams and Operating Conditions of Coking Plants

6.8.1. Coking in Stills

A schematic flow diagram of coking in a still is shown in Fig. 39. Coking consists of a number of consecutive technological operations. First the still is steamed to remove air from it so that no explosive mixture forms with the stock vapour. Next the stock heated to at least 100 °C is charged into the still. The filled still is heated from below with an open flame, the rate of temperature elevation in

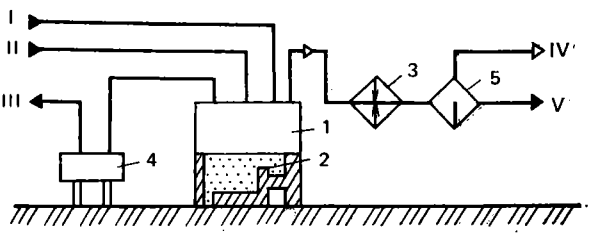

Fig. 39. Coking plant with a horizontal still:

1—coke still; *2*—furnace; *3*—condenser and cooler; *4*—tank for paraffinic discharges; *5*—gas separator; *I*—feed stock; *II*—steam; *III*—paraffinic discharges to flame; *IV*—gas; *V*—coke distillate

it being monitored by regulating the intensity of heating. Usually the temperature in the still is elevated by 40-60 K during the first two hours, and then at a rate of 10-30 K an hour.

At 300 °C, separation of the distillate fractions begins, which increases as the temperature of the still rises to 400 °C. Above this point, the temperature in the still is elevated more slowly, and the formation of fractions also retards. At 450-460 °C, the last heavy distillates separate.

Further heating of the coke still is needed to complete the coking process, dry and calcinate the coke. In calcination, the temperature of the still bottom is raised to 750 °C (the bottom acquires a crimson colour), and this temperature is maintained for two or three hours. After completion of calcination, the temperature of the bottom is lowered for two hours, the nozzle is extinguished, and cooling of the still is begun.

For cooling, first steam is fed in, and then air. At 150-200 °C, extraction of the coke is begun. This is done by an electrical winch with a steel rope. The extraction of coke from a still is a poorly mechanized, time-consuming operation.

The dimensions of coke stills range from 2.2 to 4.3 m in diameter and from 10 to 12.7 m in length. The larger stills are used to coke cracking residues. Each plant is a battery of 4 to 12 stills operating independently.

6.8.2. Delayed Coking

Flow Diagram. Figure 40 is a diagram of a modernized double-block delayed coking plant. The feed stock is taken in by pumps *1* and is pumped in two parallel streams through heat exchangers *2* (where it is heated by the reflux of column *16*) into the right-hand part of the coils of furnaces *5*. The heated stock is fed onto the cascade plates of rectification column *16*. Here the stock comes in contact with the vapour arriving from the reaction chambers and is heated to 400 °C. The condensed high-boiling products of coking and the fresh stock form a mixture that is directed by pumps *7* from the bottom of column *16* into the coils of pipe furnaces *6*. From the coils, the stock flows into the relevant chambers *14* operating in pairs.

To improve the quality of the coke, an additional amount of heat is supplied to the chambers in the form of the vapour of the heavy coking gas oil. This gas oil is withdrawn from column *16*, is fed by pump *8* through the left-hand part of the coils of furnaces *5*, where it is heated to 525 °C, and is directed for mixing with the feed stock into switch-over cocks *9*. The heavy gas oil is fed into the chambers not only mixed with the feed stock, but also independently, during six hours after the supply of the stock is stopped, during the period

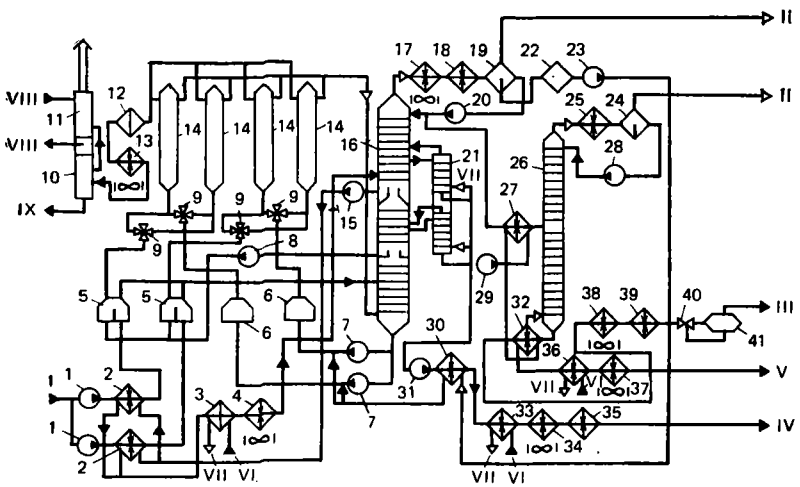

Fig. 40. Flow diagram of a delayed coking plant:

1, 7, 8, 15, 20, 23, 28, 29, 31—pumps; *2, 27, 30*—heat exchangers; *3, 33, 36*—evaporators; *4, 13, 25, 34, 35, 37-39*—coolers; *5, 6*—pipe furnaces; *9*—four-way cocks; *10, 19, 22, 24, 41*—tanks; *11*—scrubber; *12*—filter; *14*—chambers; *16, 21, 26*—columns; *17, 18, 25*—condensers and coolers; *32*—boiler; *40*—injector; *I*—feed stock; *II*—gas; *III*—gasoline; *IV*—light gas oil; *V*—heavy gas oil; *VI*—chemically purified water; *VII*—steam; *VIII*—water; *IX*—heavy petroleum products

of "soaking" of the coke. Owing to the supply of the heavy gas oil, the coke acquires a high mechanical strength and contains little volatile matter.

At the end of a coking cycle, an antifoaming additive is introduced into the coking chamber to reduce foaming of the stock and thus prevent deposition of the coke in the column, furnace pumps, and reaction coils of the furnaces. Light gas oil is fed into the top part of the coking chambers to lower the temperature of the vapour withdrawn from them.

The reaction products are directed from the chambers into rectification column *16*. The bottom part of the column is provided with cascade plates, and the top part, with rectification ones. The top part of the column is where the reaction products are separated into fractions.

The gasoline vapour and gas flow from the top of the column into air condenser and cooler *17* and water cooler *18*. The condensate from cooler *18* is fed into water and gas separator tank *19*, where the gas is separated from the gasoline and the latter from water. The water is discharged into tank *22* and is then used as a turbulizer of the streams of furnace *6* (after preliminary heating in exchanger *30*).

Two side-cut fractions—light and heavy gas oils—are withdrawn from column *16*. The streams are fed into the sections of st ipping column *21*. The light gas oil is taken in from the top section of column *21* by pump *31*, is pumped through exchanger *30* for heating the turbulizer, evaporator *33*, air *34* and water *35* coolers, and is then withdrawn from the plant.

The heavy gas oil from the bottom section of column *21* is pumped by pump *29* through exchanger *27* for heating the stock of the stabilizer, stabilizer reboiler *32*, evaporator *36*, air cooler *37*, and is then withdrawn from the plant.

The excess heat of column *16* is removed by the circulating reflux taken in by pump *15* from the tenth plate, is pumped through exchangers *2* for heating the stock, evaporator *3*, and air cooler *4*, and is then recycled to the column.

The gasoline fraction from water and gas separator tank *19* is fed by pump *20* through exchanger *27* into stabilizer column *26*. Here the gasoline is debutanized. The vapour from the top of column *26* flows into condenser and cooler *25*, whence the vapour and liquid mixture is directed into gas separator tank *24*, where it is separated into the stabilizer gas and stabilizer overhead. The gas is discharged from the plant, while the overhead is recycled to column *26* as a reflux. The stable gasoline from the bottom of column *26* under its own pressure passes through boiler *32*, air *38* and water *39* coolers. The gasoline is mixed with a circulating alkali in an injector, and is then separated from the alkali in tank *41*. An anti-

oxidant is added to the gasoline to improve its stability before it is withdrawn from the plant.

The reaction chambers of delayed coking plants operate according to a cyclic schedule. The latter provides for alternating cycles of the reaction, coke cooling, coke discharge, and chamber heating.

At the initial instant when the stock is fed into a non-operating chamber, the walls of the latter are heated by the hot stock. During this period, evaporation processes predominate over cracking, and the distillate leaving the top of the reaction chamber consists of the light fractions of the stock that have almost not been decomposed. A liquid substance consisting of the heavy part of the stock accumulates in the bottom part of the chamber. The duration of the first period depends on the stock quality and on its temperature.

Subsequently, a higher and higher layer of liquid accumulates in the chamber, and destruction reactions proceed in it quite intensively. The viscosity of the liquid residue gradually grows, and it transforms into coke. The second coking period is distinguished by a constant yield and quality of the decomposition products.

When the chamber is filled with coke to about 80%, the stream of stock is switched over to another chamber by manipulating special four-way cock *9*. In the disconnected reaction chamber, the formation of coke retards owing to lowering of the temperature. A spongy and friable mass of coke is deposited in the top part of the chamber during this period. There are altogether three coke layers along the height of the chamber, namely, the bottom one formed during the first period, the middle one formed during the second period, and the top one deposited at the end when the chamber cools. The coke in the top layer has the lowest strength, contains a lot of volatile matter, and has an increased ash content because it was formed as a result of the coking of resinous and asphaltenic substances. The ash elements and sulphur are generally concentrated in these substances.

After disconnection of a chamber filled with coke, steam is blown through it to remove liquid products and petroleum vapour. The removed products first flow into column *16*. When the temperature of the coke has dropped to 400-405 °C, the vapour stream is diverted from column *16* and is directed through filter *12* and condenser and cooler *13* into tank *10*. When the coke has cooled to 200 °C, water is fed into the chamber. The steam formed is condensed in scrubber *11*.

After cooling, the coke is discharged from the chamber hydraulically. The equipment intended for this purpose is accommodated on a special steel member installed over the coking chambers. The layout of the equipment is shown in Fig. 41.

The coke is discharged in two stages. In the first one, a central shaft (borehole) is drilled hydraulically in the coke layer. A hydraulic cutter transferred to its "drilling" position is lowered into the cham-

ber through a top hatch, and a water pump feeds in water under a pressure up to 18 MPa.

The three powerful water jets flowing out of the drilling nozzles destroy the coke layer and create a channel from 0.6 to 1.8 m in diameter through the coke. After completion of the first stage, the hydraulic cutter is withdrawn from the chamber. It is transferred to its "breaking out" position, and the second stage of discharging is commenced. During the second stage, the water flows out of two side nozzles of the hydraulic cutter horizontally. The cutter is moved over the chamber until all the coke has been removed from it.

The discharged coke is delivered into the plant's coke processing and transportation system responsible for crushing, dehydration, separation into fractions, and storage of the coke.

Delayed coking plants use coke processing and transportation systems that can be divided into two types. The first of them is characterized by an interruption between the systems for the hydraulic removal and transportation of the coke. The coke is discharged from the chambers onto an adjacent area where it is left standing for a definite time to let the water drain off. Next the coke is delivered by a bucket crane into a crusher, whence conveyors deliver it to the storage facilities. In systems of the second type, there is a rigid link between the hydraulic discharging and transportation equipment. The coke and water from the chambers are delivered directly into a crusher under the chamber outlet. The crushed coke falls onto a scraper conveyor and during its transportation on the conveyor to storage is separated from water and the fine fractions.

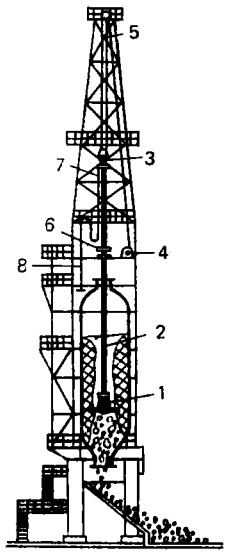

Fig. 41. Layout of equipment for the hydraulic discharging of coke from chambers:
1—hydraulic cutter; 2—drill rod; 3—winch; 4—swivel; 5—pressure pipe; 6—pulley block system; 7—hose; 8—drain pipe

The experience gained in operation has proved the merits of coke processing and transportation systems of the first type (Fig. 42).

A coke chamber from which the coke has been discharged is pressurized and heated with direct steam. The latter displaces air from the chamber. Next the hot vapour of coking products from a working

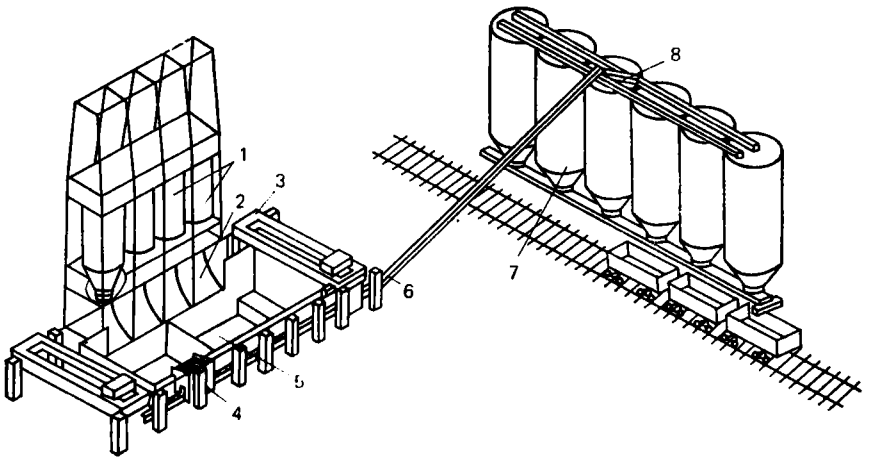

Fig. 42. Coke processing and transportation system:
1—coking chamber; *2*—ramp; *3*—bucket travelling crane; *4*—crushing unit; *5*—accumulator pit; *6*—belt conveyor; *7*—coke store; *8*—screen

chamber is passed through the chamber for some time. This vapour is then directed into rectification column *16* (see Fig. 40). When the chamber being prepared is heated up to 360 °C, the formation of coke in the operating chamber terminates. At this moment, the chambers are switched over.

Technological Conditions. The technological conditions of the process are as follows:

Temperature, °C:	
stock at outlet from heating coil . . .	350-400
stock at outlet from reaction coil . . .	480-505
vapour at outlet from chamber . . .	430-445
Pressure in coking chamber, MPa . . .	0.18-0.36

Optimal Schedule. An optimal schedule of coke chamber operation (in hours) is given below:

Feeding in stock and filling chamber with coke	24
Switching over and steaming chambers . . .	7
Cooling coke with water	3
Pouring off water and opening hatches . . .	2
Discharging coke	4
Closing hatches	3
Pressurizing chambers	1
Heating chambers with coking vapour	4

Material Balance. Below is given the material balance of a delayed coking plant when operating with tar of Kotur-Tepe (I) and West-Siberian (II) petroleum and with the cracking residue of Tatar petroleum (III):

	I	II	III
Characteristic of Stock			
Specific gravity, d_4^{20}	0.956	0.980	1.020
Carbon residue, %	7.5	13	20.4
Yield of Products, %			
Hydrocarbon gas	9.0	10.3	10.5
Gasoline	10.2	12.0	8.0
Light gas oil	29.6	37.0	24.3
Heavy gas oil	33.2	14.7	27.2
Coke	16.0	24.0	28.0
Losses	2.0	2.0	2.0
Total	100.0	100.0	100.0

Equipment. The basic reaction facility at a delayed coking plant is the reaction (coking) chamber. It is a hollow apparatus provided with pipelines having shutoff and switching accessories, a top and bottom hatches. The chambers are made from carbon steels and are lined inside with stainless steel sheets 3-5 mm thick. The lining is needed for protection from corrosion by sulphur-containing compounds. Soviet plants with a capacity of 300-600 thousand tonnes a year use chambers from 4.6 to 5.5 m in diameter, and plants for 1.5 million tonnes a year use chambers 7.0 m in diameter.

The number and size of the chambers depend on the capacity of the plant as regards the feed stock, its quality, and the pressure in the chambers. An increase in the pressure raises the yield of coke and gas, makes it possible to feed the liquid stock into a chamber at a higher rate, and use the excess pressure in the system to feed the gas to the gas unit.

The plants are also provided with rectification columns, pipe furnaces, and high-pressure pumps for handling the stock and water. Special equipment is intended

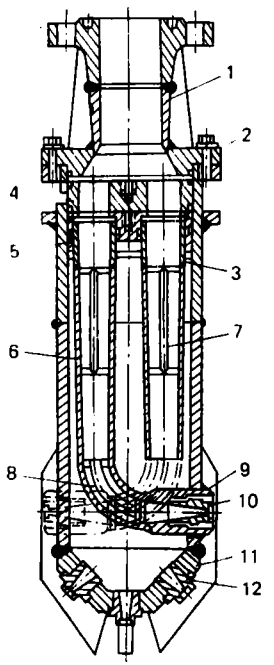

Fig. 43. Universal hydraulic cutter ГРУ-2:

1—neck; *2*—lid; *3*—cylindrical part of shaft; *4*—piston valve; *5*—distributor; *6*—conical part of shaft; *7*, *8*—dampers; *9*—reducer nozzles; *10*—cutting nozzles; *11*—body of hydraulic drilling bit; *12*—drilling nozzles

for the hydraulic discharging of the coke from the chambers, processing and transportation of the coke at the plant.

Figure 43 shows a universal hydraulic cutter ГРУ-2 in which high-pressure compact water jets are formed. They drill a central shaft and break away the coke hydraulically.

Basic Faults in Operation. The most serious faults in the operation of delayed coking plants include (1) throwing of coke particles over the top of a chamber; this occurs when liquid products accumulate in the chamber that have not been decomposed or coked at the given temperature and form a foamed body; (2) clogging of the bottom part of a column with coke fines; (3) coking of the furnace

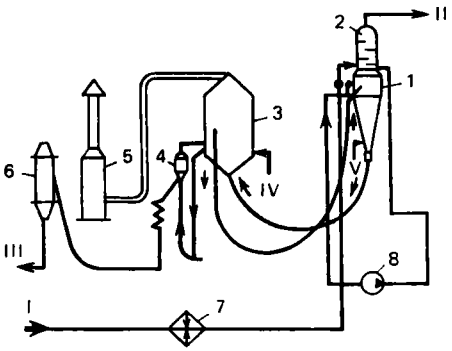

Fig. 44. Reactor unit of a fluidized bed coking plant:
1—reactor; *2*—partial condenser; *3*—coke heater; *4*—separator and cooler; *5*—waste-heat boiler; *6*—balance coke tank; *7*—heat exchanger; *8*—pump; *I*—feed stock; *II*—vapour to rectification column; *III*—coke; *IV*—air; *V*—steam

reaction coil; (4) coking of the cracking case vapour line (the pipeline from a chamber to column *16*—see Fig. 40); and (5) self-ignition of the coke discharged from the chambers on the discharging areas and in the stores.

To reduce foam formation, an antifoam additive ПМС-200 or СКТН-1 is fed into the top part of a coke chamber at the end of the coking cycle. To prevent coking of a coil, the velocity of the stock flow is increased by introducing a turbulizer—water or steam. At some plants, highly aromatized additions are introduced into the stock to prevent coking.

6.8.3. Coking in a Fluidized Bed

A continuous coking process requires the constant discharge of the formed coke from the reactor. This task has been solved in a fluidized bed coking plant. The plant's main apparatus is a reactor in which a fluidized bed of the coke heat-carrying agent—coke par-

ticles not over 2 mm in size—is maintained. The liquid feed stock flows onto the surface of the particles. It comes into contact with the hot surface and flows over it in a thin film. The volatile matter separates from the surface, while the particle itself is covered with a thin layer of the newly formed coke. The fluidized bed is maintained in the reactor by the feeding in of steam and the vapour of the coking products.

Owing to the high temperature of the coke heat-carrying agent and feeding of steam into the particle bed, the removal of decomposition products from the surface of the particles is accelerated, and the formation of condensation products is prevented. This is why the coke yield in fluidized bed coking is lower than in delayed coking or in coking in stills.

To maintain the required temperature in the reactor, the coke heat-carrying agent is withdrawn into a coke heater, where it is partly burned in a stream of air. The particles that as a result of repeated deposition have reached an especially large size are removed from the coke heater through a separator and cooler.

A schematic diagram of the reactor unit of a fluidized bed coking plant is presented in Fig. 44. The vapour and gas mixture from the reactor is directed for separation, the products being gas, stabilizer overhead, gasoline, light and heavy gas oils.

The introduction of the fluidized bed coking process has been limited owing to the absence of a demand for powdered coke. To utilize this coke, it has been proposed to gasify it and transform it into a coke gas consisting of hydrogen and carbon oxides. After purification, the coke gas is used as a fuel.

6.9. Pyrolysis Feed Stock, Parameters, and Products

Designation. Pyrolysis is the most rigorous of the thermal processes of petroleum treatment. It is conducted at temperatures of 750-900 °C and is intended for the production of a hydrocarbon gas with a high content of alkenes—ethylene, propylene, and butylene. Since in modern petrochemical synthesis ethylene has found the greatest application of the alkenes, pyrolysis plants are often called ethylene ones.

Feed Stock. When choosing the stock for pyrolysis plants, one must have in view the nature of the transformations which the various classes of hydrocarbons experience. In the pyrolysis of normal alkanes, the following main laws are observed: ethane transforms almost completely into ethylene, ethylene and propylene form with a high yield from propane and butane, 45-50% of ethylene, propylene, and unsaturated hydrocarbons with four or more carbon atoms form from alkanes with five and more carbon atoms. In the pyrolysis of isoalkanes, the ethylene yield is smaller; more gaseous

alkanes, especially methane, form. Arenes at moderate pyrolysis temperatures are a ballast, while at higher ones they form a substantial amount of coke and resin. In the pyrolysis of cycloalkanes, a noticeable amount of butadiene forms (up to 15%). Pyrolysis plants in industrial practice generally process gaseous hydrocarbons (ethane, propane, butane, and their mixtures) and liquid petroleum fractions (straight-run gasoline and gasoline-raffinate from plants extracting aromatics—see Sec. 7.10). Straight-run gasoline is preferable to raffinate because it mainly contains normal alkanes, whereas raffinates contain up to 50% of isoalkanes whose pyrolysis, as already indicated, yields a lot of gas. In recent years, gasoline fractions are mainly used as the feed stock for high-capacity ethylene plants. The use of this kind of stock makes it possible to obtain valuable aromatics and stock for the production of technical carbon and naphthalene in addition to the lower alkenes.

In the future, the kerosene and gas oil fractions may be used as pyrolysis stock. The latter, however, requires preliminary preparation—purification from sulphur-containing compounds and dearomatization.

Below are given data on the yield (in %) of the target products—ethylene, propylene, and the C_4 fraction—in the pyrolysis of various kinds of stock:

	Ethylene	Propylene	C_4 fraction
Ethane	42-52	—	—
Propane-butane fraction	30-32	14-15	7-9
Gasoline	22-29	14-17	9-13

Process Parameters. The basic parameters of pyrolysis are the temperature, duration of contact, and the pressure. The choice of these parameters depends on what stock is being processed in a plant and in what ratio the target products are to be obtained. For each kind of stock, there is an optimal combination of the temperature and duration of the process. Thus, at 900 °C, the maximum ethylene yield corresponds to a contact time of 0.08 s, and at 1000 °C, of 0.01 s.

At the same value of the contact time, a higher temperature is needed to obtain the maximum yield of ethylene than for propylene. By changing the contact time at the same pyrolysis temperature, in turn, one can achieve the required relation between the pyrolysis products. This is illustrated by the data given in Fig. 45.

To diminish the role of a condensation reaction, pyrolysis should be conducted at the lowest possible pressure. Under real conditions in pyrolysis plants, the pressure at the outlet from the pipe furnace is 0.2-0.25 MPa. To reduce the negative effect of an increased pressure, pyrolysis is conducted in the presence of superheated steam whose feeding in is regulated by the partial pressure of the hydro-

carbon stock. Dilution of the stock by steam lowers the probability of collisions between the alkene molecules, the result being fewer polymerization and condensation reactions. In the pyrolysis of a gaseous stock and liquefied gases, 10-20% of steam is added to the stock, and in the pyrolysis of gasolines, from 25 to 60% relative to the stock.

Coke formation is lowered by using coke deposition inhibitors. The addition of inhibitors increases the continuous run of pyrolysis furnaces up to 3000 hours and more, makes it possible to raise the pyrolysis temperature to 920-950 °C and lower the degree of dilution with steam. Potassium carbonate is employed as a coke deposition inhibitor.

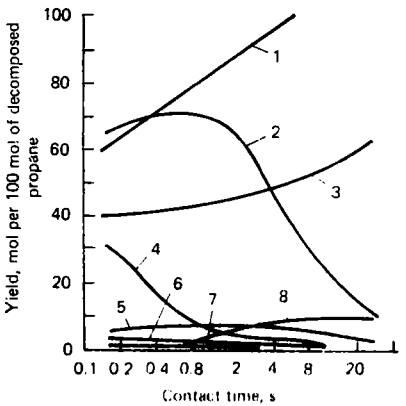

Fig. 45. Yield of propane pyrolysis products versus the contact time:
1—methane; *2*—ethylene; *3*—hydrogen; *4*—propylene; *5*—ethane; *6*—C_4 hydrocarbons; *7*—C_5 hydrocarbons; *8*—arenes

Composition and Properties of Products. Pyrolysis yields pyrolysis gas and liquid products.

Pyrolysis gas contains hydrogen, hydrocarbons with from one to four carbon atoms, steam, and microadmixtures of CO, CO_2, and H_2S. The purification and gas separation units are intended for the removal of harmful admixtures, drying of the gas, and separation of it into hydrogen, methane, ethane, ethylene, propylene, propane, and the butylene-butadiene fraction. 1,3-Butadiene—a raw material for the synthetic rubber industry, is separated from the butylene-butadiene fraction. At some plants, the separated alkanes—ethane and propane—are recycled into the feed stock.

Liquid Pyrolysis Products. This group includes the hydrocarbons with five or more carbon atoms produced in pyrolysis, which under ordinary conditions are in the liquid form. Sometimes these products are called **pyrolysis resin.** The amount of liquid pyrolysis products mainly depends on the kind of stock, which is illustrated by the following data:

Feed stock	*Yield of liquid products, % of stock*
Ethane	2-3
Propane	8-10
Butane	8-12
Light gasoline (IBP-145 °C)	20-25
Kerosene and gas oil fraction	35-40

The yield of resin (liquid products) also grows when the pyrolysis temperature is lowered. Thus, in the low-temperature pyrolysis (at 750 °C) of gasoline, the resin yield is 30-35%, while in high-temperature pyrolysis (850 °C) it drops to 20-25%.

The liquid pyrolysis products, regardless of the stock used and the pyrolysis conditions, have an approximately identical hydrocarbon composition and distillation range. They contain 10-15% of alkadienes, 10-15% of alkenes, 20-30% of benzene, 10-15% of toluene, and also unsaturated compounds such as styrene and indene and cycloalkenes such as cyclopentadiene. The pyrolysis resin can be processed using two variants, namely, the fuel and the chemical ones.

In the fuel variant, the resin is divided into two fractions—a light and heavy ones. The unsaturated hydrocarbons are removed from the light fraction by hydrogenation. The purified product called hydrostabilized gasoline has an octane number of 78-80 and is used as a component of high-octane motor gasoline. The heavy fraction is delivered for use as furnace fuel.

The chemical variant of processing the liquid pyrolysis products is economically more profitable. They are divided into the fractions IBP-70 °C, 70-130 °C, 130-190 °C, 190-230 °C, and above 230 °C. Cyclopentadiene and isoprene are separated from the IBP-70 °C fraction, while benzene, toluene, and xylenes are separated from the 70-130 °C fraction. The 130-190 °C fraction is polymerized with the production of a synthetic petropolymer resin used as a substitute of natural oils. The 190-230 °C fraction can be employed as a stock for producing naphthalene, and the fraction above 230 °C for the production of technical carbon. At some pyrolysis plants, the 70-190 °C fraction is subjected to deep hydrogenization with the production of the most valuable aromatic—benzene.

6.10. Pyrolysis Plant

A modern pyrolysis plant is a complex enterprise consisting of several units (sections) for pyrolysis of the hydrocarbon feed stock, compression and purification of the pyrolysis gas, gas separation, and processing the pyrolysis resin (liquid fractions).

Flow Diagram. Figure 46 shows a flow diagram of a pyrolysis plant. The feed stock—a mixture of straight-run gasoline and raffinate—is delivered by pump *1* through exchanger *2* into several furnaces *12* operating in parallel (the diagram shows only one furnace). The mixture of ethane and propane recycled from the gas separating unit is directed by pump *4* into furnace *15* after being heated in exchanger *5*. In the furnaces, the stock is first heated in the convection chamber, and is then fed into the radiant chambers. Steam is added to the stock at the outlet from the convection chamber.

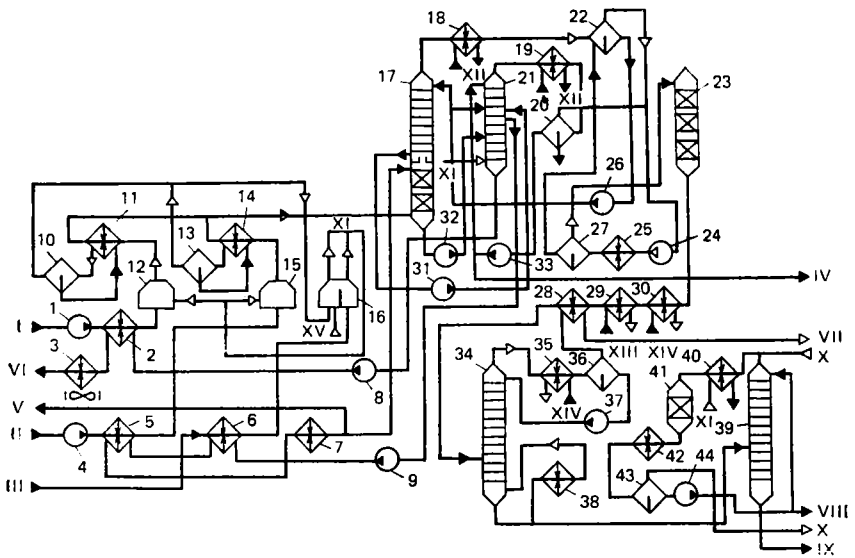

Fig. 46. Flow diagram of pyrolysis plant:

1, 4, 8, 9, 26, 31-33, 37, 44—pumps; *2, 5, 6, 28-30, 40*—heat exchangers; *3, 7, 25, 42*—coolers; *10, 13, 20, 22, 27, 36, 43*—separators; *11, 14*—hardening and evaporating units; *12, 15, 16*—furnaces; *17, 21, 23, 34, 39*—columns; *18, 19, 35*—condensers and coolers; *24*—compressor; *38*—boiler; *41*—selective purification reactor; *I*—gasoline feed stock; *II*—mixture of ethane and propane; *III*—chemically treated water; *IV*—fraction IBP-150 °C; *V*—fraction 150-250 °C; *VI*—fraction > 250 °C; *VII*—methane-hydrogen fraction; *VIII*—ethane-ethylene fraction; *IX*—deethanized condensate; *X*—hydrogen; *XI*—steam: *XII*—circulating water; *XIII*—ethylene; *XIV*—propylene; *XV*—flue gases

The products of the reactions from furnaces *12* and *15* are directed into hardening and evaporating units *11* and *14*, which are waste-heat boilers. Hot water is fed from separators *10* and *13* into the intertubular space of these units, where the heat of the reaction products converts it into high-pressure steam. This steam after being superheated in furnace *16* is used for various technological needs, and in particular for turbocompressor *24* that compresses the pyrolysis gas.

The steam and vapour mixture leaving the hardening and evaporating units flows into the bottom part of preliminary fractionating column *17*. Here it is cooled to 180 °C and carbon particles are washed from it by contact with the cooled stream of the 150-250 °C fraction fed into the middle of column *17*. A heavy resin is withdrawn from the bottom of column *17* and is delivered by pump *32* into rectification column *21*.

Column *17* is divided into two parts by a one-way plate. The vapour and gases from the bottom part of column *17* pass through the plate and in the top part are additionally washed by the cold reflux. The condensate from the solid plate is directed by pump *31*

into column *21*, while a mixture of gases and light hydrocarbon vapours leaves the top of column *17*. This mixture after cooling in cooler *18* flows into separator *22*. The gases from the latter are taken in by centrifugal compressor *24*, while the condensate is fed by pump *26* into column *21* and for spraying in column *17*.

In rectification column *17*, the liquid pyrolysis products are divided into three fractions. The gasoline fraction IBP-150 °C is withdrawn from the top of the column and is directed into the resin treating section.

The 150-250 °C fraction is withdrawn from the middle part of column *17* and is cooled in exchangers *6* and *5* and in cooler *7*. Next it is partly used as a washing product in column *17*, while the remaining part is withdrawn into the resin treatment section. The fraction above 250 °C is taken in from the bottom of column *21* by pump *8*, is fed through the stock heating exchanger *2* and cooler *3*, and is discharged from the plant.

Centrifugal five-stage compressor *24* provided with a steam drive compresses the pyrolysis gas to 6.5 MPa. After each stage, the gas is cooled in interstage coolers and is separated from the condensate. The latter is returned to separator *22*. After the fourth compression stage, the gas is purified with a monoethanolamine solution from hydrogen sulphide and carbon dioxide (the purification unit is not shown in the diagram).

The compressed gas is dried by zeolites in column *23*, is cooled in exchangers *30*, *29*, and *28* by the cold streams of propylene, ethylene, and methane, and then flows into a rectification column—demethanizer *34*. The methane-hydrogen mixture emerging from the top of this column is cooled by propane in cooler *35* and is separated from the condensate in separator *36*. The condensate is recycled by pump 37 to provide a reflux in column *34*, while the methane and hydrogen mixture is withdrawn from the plant through exchanger *28*.

The residue from column *34* flows by gravity into deethanizer *39*. The ethane-ethylene fraction is the overhead product of column *39*. It is mixed with hydrogen and after being heated in exchanger *40* is selectively purified from acetylene in reactor *41*. The purified ethane-ethylene fraction is cooled in cooler *42* and is separated from hydrogen in separator *43*. Next the ethane-ethylene fraction is fed by pump *44* for spraying in deethanizer column *39* and for separation in this column into ethane and ethylene.

The bottom product of column *39* is delivered for further fractionation, during which propane, propylene, the butylene-butadiene fraction, and the fraction with five or more carbon atoms are separated in different columns.

Technological Conditions. Below are given the main indices of the technological conditions adopted at plants of type ЭП-300 for

producing ethylene by the pyrolysis of gasoline erected at several refineries:

Pyrolysis Furnace

Temperature in reaction zone, °C	810-850
Pressure of stock at inlet, MPa	0.4-0.7
Consumption of steam, %:	
relative to gasoline	50
relative to ethane-propane fraction	30
Residence time of stock in reaction zone, s	0.3-0.5

Hardening and Evaporating Units

Temperature at outlet, °C	400-420
Pressure of produced steam, MPa	12

Preliminary Fractionating Column

Temperature of top, °C	97-108
Temperature of bottom, °C	170-180
Pressure at top, MPa	0.18-0.20

Compression of Pyrolysis Gas

Pressure at compressor inlet, MPa	0.13
Pressure at outlet, MPa	6.5

Columns of Gas Fractionation Unit

	Demethanizer	Deethanizer	Ethylene column
Temperature of top, °C	−94	−4	−29
Pressure at top, MPa	3.5	2.9	2.0

Material Balance. The material balance for the pyrolysis of straight-run gasoline (I) and the ethane fraction (II) is given below:

Feed		
Stock	100.0	100.0
Products		
Methane-hydrogen fraction	18.5	14.0
Ethylene	29.0	50.0
Propylene	14.0	1.0
Ethane-propane fraction	4.6	31.0
Butylene-butadiene fraction	11.5	2.0
Liquid products (C_5 and higher)	22.4	2.0
Total	100.0	100.0

Equipment. A *tubular pyrolysis reactor* (*pyrolysis furnace*) is the basic reaction apparatus of modern pyrolysis plants. The main positive properties of a tubular reactor are its simple design, low operating costs, and stable operation. A very important feature of a tubular reactor is the need to have a volume of the reaction zone such that

the stock will decompose to the required extent during a short time. This time corresponds to the time of contact and is determined by the conditions of conducting the process.

In modern pyrolysis furnaces, part of the coil pipes are in the convection chamber, and part in the radiant one. In the convection chamber, where the temperature does not exceed 500-600 °C, the stock is heated and evaporates. In the radiant chamber, where the heat intensity of the heating surface is known to be maximum, the stock decomposes.

During recent years, the design of tubular pyrolysis reactors has changed quite substantially. Up to 1968-1970, furnaces with horizontal double-stream coils were popular. The residence time of the stock in the reaction zone of these units reached 0.8-1.0 s, while the pyrolysis temperature was 750-780 °C. The shortcomings of these furnaces include the non-uniform distribution of the heat, the difficulties involved in controlling the fuel combustion process, and the need to provide intricate supports from high-alloy steels. These furnaces are giving way to units with a vertical arrangement of the pipes in a coil in which rigorous pyrolysis conditions are ensured—a temperature of 840-860 °C and a contact time of 0.1-0.2 s.

Figure 47 shows a high-temperature pyrolysis furnace designed by the VNIPINeft' Institute. The furnace accommodates pipes made from heat-resistant steel manufactured by centrifugal casting. The furnace is of a multiple-flow design. The coil for each of the eight flows consists of nine pipes eight metres long connected by U-bends.

Pyrolysis plants have several furnaces whose number depends on the capacity of a furnace and the required capacity of the plant. Thus, a pyrolysis plant handling 250 000 tonnes of stock a year has six furnaces in each of which from 7 to 7.5 tonnes of stock are pyrolyzed an hour. At the same time, a consolidated pyrolysis plant for one million tonnes of stock a year has only four pipe furnaces, but of a higher capacity.

The *hardening and evaporating unit* is a tubular heat exchanger through whose tube space the pyrolysis gas flows, while chemically purified water is fed into the intertubular space. The latter is connected by pipelines to a steam collecting drum. There are various designs of hardening and evaporating units differing in the arrangement of the heat-exchange tubes, the nature of the connection to the steam collecting drum, etc.

Automation of Process. Pyrolysis plants are provided with instruments and systems for automatic regulation of the process. The pressure of the vapours in the evaporating section is maintained automatically by feeding steam for heating into the evaporating heat exchanger with the aid of a pressure governor. The temperature of the pyrolysis gases at the outlet from the pyrolysis coils is controlled by changing the supply of fuel into the furnace. It is very important

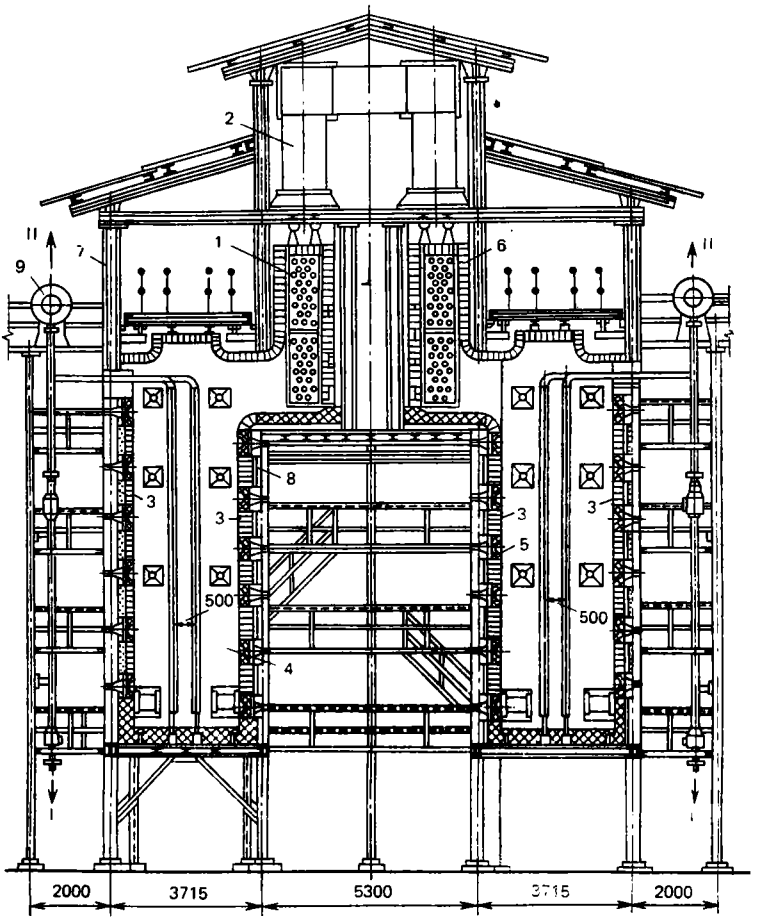

Fig. 47. High-temperature pyrolysis furnace:
1—convection chamber; *2*—gas flue; *3*—wall of suspended chamotte articles; *4*—burners; *5*—radiant chamber; *6*—reactor coil; *7*—metallic housing and thermal insulation; *8*—framework; *9*—hardening-evaporating units and steam collectors; *I*—pyrolysis gas; *II*—steam

to change the pyrolysis temperature in good time when the load on a furnace and the composition of the stock change. At present, control systems with the use of chromatographs are being introduced. The conditions of operation are changed automatically on the basis of chromatographic analysis of the stock composition.

Chapter 7

THERMOCATALYTIC PROCESSES OF PETROLEUM FRACTION TREATMENT

7.1. Catalysis and Properties of Catalysts

Most chemical transformations of petroleum hydrocarbons of a practical significance are carried out in the presence of catalysts. The latter lower the activation energy of chemical reactions and thus appreciably increase their rate. In a most general form, this is exactly the essence and importance of catalysis. The conducting of a reaction in the presence of a catalyst also sharply lowers the temperature of the process. This is especially significant for reactions characterized by a positive heat effect (polymerization, hydrogenation, alkylation, etc.) because high temperatures are unfavourable for them from a thermodynamical viewpoint.

Any catalyst reacts actively with the reactants, but its participation in a process is confined only to the initial stages of the transformations. In the subsequent stages, it is completely regenerated and can again react with reactant molecules. This is exactly what explains why a small amount of a catalyst is sufficient for producing very large amounts of the reaction product. That the activation energy of a chemical reaction drops because of the formation of intermediate systems with the participation of a catalyst is doubtless. But the nature of the reaction with a catalyst may be the most diverse.

Homogeneous and heterogeneous catalysis are distinguished. In **homogeneous catalysis**, the catalyst and reactants form a homogeneous system, for example, gas mixtures or liquid solutions. In **heterogeneous catalysis**, the catalyst is most frequently in the solid phase, while the reactants are in the gaseous or vapour state, i.e. in a different phase. Cases are possible when the reactants and catalyst are immiscible liquids. The most popular catalytic processes for producing fuel in the petroleum-refining industry are catalytic cracking, isomerization, reforming, alkylation, and hydrocracking.

Over 90% of the processes inaugurated lately are based on the use of catalysts.

To facilitate the consideration of the mechanism of catalysis, it is customary practice to divide all catalytic reactions into acid-base and oxidation-reduction ones.

Acid-base, or **ionic** catalytic reactions are explained by the attachment or detachment of a hydrogen ion (proton). They also include reactions in which a free pair of electrons of a reactant or the catalyst moves without separation of the electrons and forms a coor-

dination bond in a complex compound. We shall also note here that in accordance with Lewis's theory, acids are defined to be compounds whose molecules can attach an electron pair, i.e. include it in the electron shell of one of its atoms.

Bases are defined to be compounds whose molecules have an unshared pair of electrons capable of being introduced into the electron layer of an acid. This is the most general interpretation of the concepts of an acid and base. From this viewpoint, the group of acids, in addition to the conventional acidic substances, includes compounds that do not even contain hydrogen such as $AlCl_3$, $FeCl_3$, $ZnCl_2$ and BF_3. All these substances are complex-forming catalysts.

The acid-base catalytic reactions include catalytic cracking, polymerization, isomerization, hydration of hydrocarbons, and a number of other transformations.

Oxidation-reduction reactions are associated with the transfer of electrons, i.e. proceed with the detachment of an electron pair when a valence bond is broken. They include numerous catalytic processes of oxidation, hydrogenation, and dehydrogenation.

Homogeneous Catalysis. The mechanism of homogeneous catalysis is explained quite well by the theory of intermediate chemical compounds. By this theory, a catalyst forms an unstable reactive intermediate with a reactant. The activation energy of this process is lower than that of the non-catalytic basic reaction. Subsequently, the intermediate decomposes or reacts with a new molecule of a reactant, freeing the catalyst in an unchanged form. These transformations are also characterized by comparatively low activation energies.

Heterogeneous Catalysis. In heterogeneous catalysis, all the changes and transformations of substances occur at the interface of the solid phase of the catalyst and the gas or vapour phase of the reactants and are associated considerably with the phenomenon of sorption. The process can be divided into the following five stages:

(1) motion (diffusion) of the reacting molecules to the catalyst surface;

(2) activated adsorption (chemisorption) of the reactants on the catalyst surface;

(3) a chemical reaction on the catalyst surface;

(4) desorption (removal from the catalyst surface) of the reaction products;

(5) diffusion of the products into the gaseous phase.

The rate of the entire process is determined by that of the slowest stage. Here two cases are distinguished. If diffusion of the reactants and products proceeds more rapidly than the catalytic reaction itself, the rate of the process depends completely on the composition and properties of the catalyst surface. Such a process is said to be **kinetically controlled.** Conversely, if diffusion proceeds at a slower

rate than all the transformations on the catalyst surface occur, the overall rate of the reaction will be determined by the rate of diffusion. Such a process is said to be **diffusion-controlled.** The activation energy in heterogeneous catalytic reactions is lowered as a result of involved physicochemical processes characterizing the stage of activated adsorption (chemisorption).

Chemisorption is the formation of a sufficiently strong monomolecular layer of the reactants on the surface of a catalyst. It proceeds at the expense of the valence forces of the catalyst, is in essence close to a real chemical reaction, and therefore results in appreciable weakening of the bonds in the reacting molecules.

The activated adsorption of the reactant molecules occurs not on the entire free surface of a solid catalyst, but only on what are called **active centres**, where the stock of free energy is larger. They can be sharp corners, peaks, various irregularities, the edges of crystals, chemically inhomogeneous sections, and so on. In general, the more a surface is developed, the greater is the number of active centres on it. This is why the increasing of a catalyst's activity is often associated with its high degree of comminution and its well developed porous structure.

Thus, the general principle of heterogeneous catalyst action consists in that the reactant molecules colliding with the active centre of the catalyst can form various unstable intermediates (radicals or ions). Both the rate of the reactions and the composition of their products depend on the reactivity and nature of these intermediates.

When choosing and employing heterogeneous catalysts, one must take account of their selectivity, activity, and stability, the latter determining their service life.

The **selectivity** of a catalyst is defined to be its ability to accelerate only one or several chemical reactions of a definite type from among the thermodynamically probable ones under preset conditions for a given feed stock. This very important property of a catalyst is associated both with its composition and with the conditions of its use.

The **activity** of a catalyst characterizes its productivity. The higher the activity of a catalyst, the less of it is needed to transform a definite amount of the reactants into the products in unit time. The activity of a solid catalyst depends chiefly on the state of its surface. Catalysts are generally used in the form of tablets, beads, or grains small in size. To increase its surface area, a catalyst is often applied to a substrate **(carrier)** having a porous surface. Examples of carriers are activated carbon, pumice, diatomaceous earth, alumina, silica gel, and artificial zeolites of various grades. The carrier increases the activity of the catalyst, imparts mechanical strength to it, and reduces its consumption.

The activity of many catalysts can be increased by adding a small amount of **promoters**, or **activators**. The latter differ in their action. Some of them increase the internal surface area of the catalyst, i.e. act on its structure and facilitate its preservation in service. Such promoters are called **structural** ones. Others change the chemical composition of the catalyst surface and increase the number of active centres. They are called **chemical** ones.

The activity of a catalyst is generally determined in laboratory arrangements modelling the production process which the given catalyst is intended for. The activity is appraised according to the yield of the target product or the degree of conversion of the feed stock. Sometimes a sample being tested is compared with a reference whose activity is known. The activity of catalysts employed in catalytic cracking is characterized by the **activity index**, defined to be the yield (in per cent of the stock) of the fraction up to 200 °C obtained by the catalytic cracking of the reference stock under standard conditions in a laboratory arrangement.

The catalyst after each elementary event of the reaction remains unchanged. It should therefore seem to be able to function for an infinitely long time. But in practice, the service life of a catalyst is always finite because its activity diminishes with time.

The drop in the activity of a catalyst (deactivation) is often called its **fatigue** or **ageing**. The causes of this phenomenon differ. Most frequently, the activity of a catalyst is lowered because of the deposition on its active centres of products (coke, resin, paraffin wax, etc.), or because of the action of some impurities in the stock called **catalytic poisons**. The latter are especially dangerous because a negligible amount of them is sufficient for complete deactivation of a catalyst. This makes it necessary to be very attentive to the quality of the stock. Sometimes the latter has to be additionally purified to prevent catalyst poisoning. The effect of catalytic poisons is explained by their irreversible adsorption on the active centres of the catalyst.

Metallic catalysts containing iron, cobalt, nickel, palladium, iridium, platinum, copper, or silver are the most sensitive to poisons. The following catalyst poisons are encountered quite often: hydrogen sulphide and other sulphur-containing compounds, carbon monoxide, nitrous bases, halogens, compounds of phosphorus, antimony and arsenic, as well as metals (nickel, iron, vanadium) contained in heavy petroleum stock.

Catalysts are also deactivated because of a change in the structure of their surface, sintering, and other processes leading to a reduction in the surface area or in the number of active centres. Such processes may be due to the conditions of a given production process, mainly to the temperature.

Restoration of the activity of a catalyst is called **regeneration.** It can be performed in various ways. Carbonaceous and resinous deposits are burned off the surface of a catalyst in a stream of air. Oxidized catalysts are reduced by the action of hydrogen at a definite temperature. Catalysts containing rare elements (for example, thorium) are regenerated chemically. The rare element is extracted from the spent catalyst and is used again to prepare fresh portions of the same catalyst.

A variety of substances are employed as catalysts, namely, reduced metals, oxides, acids, bases, salts, metal sulphides, and some organic compounds. The choice of catalysts, studying of the conditions of their preparation and use, ways of regeneration, and other matters associated with catalysis are all an inseparable part of petrochemical technology at present.

7.2. The Catalysts and Mechanism of Catalytic Cracking

The cracking of petroleum feed stock in the presence of catalyst, or **catalytic cracking,** is at present one of the basic methods of producing the main components of motor gasolines. The use of a catalyst in a cracking process introduces substantial alterations both in the mechanism of the hydrocarbon transformations and in the composition of the products. The merits of catalytic cracking are, firstly, that as a result of the overall speeding up of the process the cracking temperature can be lowered somewhat and the process can be conducted at a low pressure, and, secondly, which is most important, the selective action of the catalyst accelerates reactions that lead to the accumulation in the cracking gasoline of arenes, isoalkanes, and isoalkenes possessing high octane numbers.

The process is conducted in the vapour phase at 450-525 °C under a pressure of not above 0.15 MPa in the presence of a silica-alumina catalyst.

Until recently, Soviet refineries employed amorphous natural or synthetic silica-alumina catalysts containing on an average 10-25% of Al_2O_3, 80-75% of SiO_2, a certain amount of water, and impurities such as oxides of iron, magnesium, calcium, and sodium. These catalysts have an activity index of about 35-38.

At present, almost all catalytic-cracking plants have been converted to operation with synthetic crystalline silica-alumina catalysts containing zeolites.

Zeolites are natural and artificial compounds of alumina and silica having an exceedingly finely porous structure. They are aqueous aluminosilicates of sodium, calcium, and other metals, i.e. they are salts of alumina-silica acids. For example, the zeolite 13X is $Na_{86}[(AlO_2)_{86}(SiO_2)_{106}]\cdot 267H_2O$. All the zeolites have a crystalline

clearly expressed structure. Their common property is the presence of very minute spaces communicating with one another through pores. The number of spaces in a zeolite crystal is very large. Their total volume can reach half of the entire volume of a crystal. It is just because of this fact that dehydrated zeolites are excellent adsorbents. But unlike other adsorbents such as activated carbon, silica gel, and alumina, zeolite pores are very small in size and all of them are of the same diameter. For various kinds of synthetic zeolites, the pore size varies from 0.3 to 1.3 nm. Hence, zeolite pores have a molecular size, owing to which they have screening properties, i.e. can pass into the space of a crystal and adsorb only molecules of a definite size not larger than their pore diameter. This is why they are also called molecular sieves.

Synthetic zeolites are produced in three types, namely, A, X, and Y. Type A zeolites have a pore diameter of 0.3-0.5 nm and are used for drying and purifying hydrocarbon gases from carbon dioxide and hydrogen sulphide, and also for the adsorption and separation of normal alkanes from their mixtures with hydrocarbons of other classes. Type X zeolites have a pore size of 0.8-1.3 nm, and type Y, of 0.8-0.9 nm. The zeolites X and Y are widely employed in the production of catalysts.

Catalysts based on 10X and 10Y zeolites are characterized by an activity index close to 50. Some of these catalysts contain rhenium oxide, which favourably affects the selectivity of the catalyst and makes it possible to obtain high gasoline yields.

The content of the zeolites themselves in zeolite-containing catalysts is not great (3-15%). In the preparation of a catalyst, zeolites modified with metals (chromium, rhenium, platinum, palladium, etc.) are introduced into a matrix (substrate) of inorganic oxides (SiO_2, Al_2O_3, clay, etc.).

The characteristics of the catalyst РСГ-2ц are given below:

Composition, %:	
SiO_2	84.3
Al_2O_3	13.0
Fe_2O_3	0.13
Na_2O	0.88
Bulk density, kg/m³	640
Activity index	48
Stability index	51.5

A feature of catalytic cracking catalysts is their rapid deactivation. The catalyst pores become clogged with coke after 10-15 minutes of operation. Therefore, cracking constantly has to be alternated with catalyst regeneration. Catalytic processes with a frequent change of the cycles of operation and regeneration are called **cyclic** ones. Regeneration consists in burning out of the coke and resinous deposits from the catalyst surface by air at 540-680 °C. To protect the

catalyst from local overheating, the air is diluted with inert gases. But the number of regeneration cycles is not infinite.

The property of a catalyst to retain its activity during service is known as its **activity stability.** With the passage of time, owing to the gradual diminishing of the unit active surface of a catalyst and to the change in its porous structure, the activity index of the catalyst drops. This occurs as a result of mechanical wear of the catalyst particles, sintering of the catalyst, and the gradual poisoning of the active centres by the metals contained in the feed stock in the form of organometallic compounds, such as paraffinic complexes, and of corrosion products. The catalyst is partly replaced continuously or periodically.

Catalytic cracking catalysts must also have mechanical strength, wear resistance, and resist the effect of a high temperature, steam, and a sharp temperature change.

Studying of the structure and properties of a silica-alumina catalyst revealed that it has a clearly expressed acidity. This relates the most to catalysts containing zeolites. Mixtures of anhydrous silicon and aluminium oxides have a low activity. Consequently, only hydrated oxides of these substances should be considered as catalysts. It should be noted that water is retained in a catalyst even when it is heated to 700 °C. The compound $(HAlSiO_4)_x$ is considered to be the carrier of the surface layer activity of a catalyst. It can dissociate into a hydrogen ion (proton) and the ion $AlSiO_4^-$. The catalyst is capable of hydrogen exchange, and this is what its activity consists in.

At present, the **carbonium-ion theory** is the most widespread one explaining the mechanism of catalytic cracking on silica-alumina catalysts. It is based on the following notions.

Carbonium ions are similar to their ammonium counterparts and contain a trivalent positively charged carbon atom. They form the easiest when a proton of the catalyst reacts with an alkene:

$$R-CH=CH_2 + H^+ \rightarrow R-\overset{+}{C}H-CH_3$$

The participation of the catalyst hydrogen in the reaction has been proved by experiments with tracer atoms (deuterium). Carbonium ions form in the chemisorbed layer of molecules and are active intermediates of many reactions proceeding in catalytic cracking.

The unstable carbonium ions tend to acquire more stable forms by internal regrouping or reaction with other molecules. They are distinguished by a very high reactivity and can enter into the most diverse reactions.

The following transformations are the most typical of carbonium ions.

1. Regrouping of the atoms in a molecule with the relocation of hydrogen or methyl groups, i.e., in other words, skeleton isomeri-

zation leading to the formation of an isomer ion:

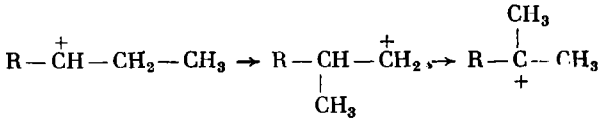

2. Reaction with neutral molecules with the formation of new carbonium ions and new saturated or unsaturated molecules:

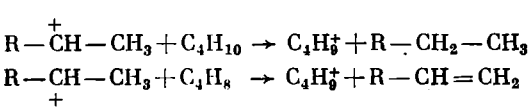

Consequently, a carbonium ion can either detach a proton from other molecules or transfer its proton to alkenes and transform into a stable alkene.

3. A carbonium ion with a large number of carbon atoms generally decomposes along a 2nd position bond, counting from the charged carbon atom. The decomposition products are an alkene and a carbonium ion with a smaller number of carbon atoms:

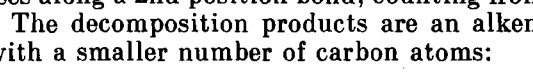

As a whole, by the carbonium ion theory, the mechanism of catalytic cracking is represented in the form of chain reactions. A chain is initiated under the action of a hydrogen ion of the catalyst:

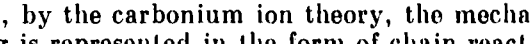

where HA signifies a silica-alumina catalyst in the form of an acid.

The chain propagates by diverse transformations of the carbonium ions and hydrogen exchange with neutral molecules. Finally, the chain terminates because of a reaction between a carbonium ion (cation) and an aluminosilicate anion:

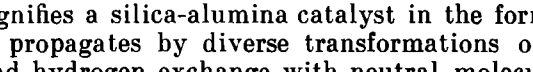

The catalyst is regenerated as a result, and the process can begin again if the catalyst surface still retains its activity.

A typical feature of catalytic cracking is the development of processes of **hydrogen redistribution** or **disproportionation.** In the general form, this process consists in that the molecules adsorbed on the catalyst tend to lose hydrogen, i.e. become dehydrogenated. This leads to an increase in the unsaturation and, consequently, to stronger adsorption on the catalyst. As a result, the newly formed unsaturated hydrocarbons begin to polymerize and transform into the product of the process—coke, which is irreversibly deposited on

the catalyst. All the active centres are gradually covered by the coke, and the catalyst has to be regenerated.

We thus see that in catalytic cracking coke is a product of the basic catalytic process, and its accumulation on the catalyst is inevitable. In thermal cracking, the coke accumulates as a result of secondary chemical transformations and is a product of the high-temperature side reactions of condensation whose role can be diminished by changing the process parameters.

Another consequence of the development of a hydrogen disproportionation process is the more saturated nature of the liquid and gaseous cracking products than in thermal cracking. The hydrogen lost by the reacting molecules adsorbed on the catalyst is used for saturation of various molecule fragments, and first of all for hydrogenation of the isomerized alkenes. Consequently, some hydrocarbon molecules lose hydrogen, while others become saturated with hydrogen at their expense. This is exactly the essence of the hydrogen disproportionation process.

Let us briefly consider the behaviour of hydrocarbons of various homological series in catalytic cracking.

Alkanes. As in thermal cracking, the alkanes decompose into an alkene and an alkane of a lower molecular mass. Decomposition occurs at several sites of the carbon chain, but not at its end. The yields of methane, ethane, and ethylene are insignificant. Hydrocarbons with three and four carbon atoms accumulate in the gas. The rate of decomposition is scores of times higher than in thermal cracking.

The alkanes do not get into the chemisorbed layer. But the surface energy of the catalyst also manifests itself beyond the limits of this layer. As a result, a zone of increased concentration of hydrocarbon molecules with weakened C—C bonds is created in direct proximity to the catalyst surface. This is just what lowers the activation energy of the decomposition reactions. In catalytic cracking, the dehydrogenation of hydrocarbons with over four carbon atoms in a molecule may also occur. The formed higher alkenes also decompose, in turn.

Alkenes. The rate of alkene decomposition in catalytic cracking is thousands of times higher than in thermal cracking. The reasons for this and the mechanisms of the transformations have already been described. In addition to decomposition, the alkenes enter into reactions of polymerization-depolymerization, isomerization, hydrogen redistribution, and cyclization.

The isomerization reactions are especially diverse. They include structural regroupings, migration of a double bond along the chain, and sometimes also *cis*- and *trans*-isomerism.

Cycloalkanes. The reactions characteristic of cycloalkane cracking, namely, dealkylation, dehydrogenation, and ring decompo-

sition are accelerated from 500 to 4000 times in the presence of a catalyst. Unlike thermal cracking, the reactions listed below are also developed quite appreciably:

decomposition of a ring with the formation of isoalkenes:

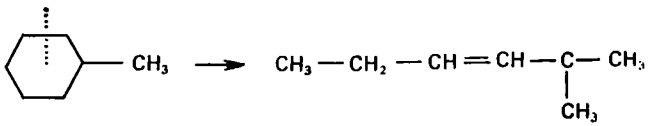

ring isomerization:

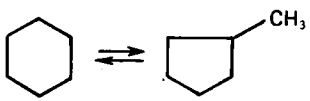

side chain redistribution (migration of substituents):

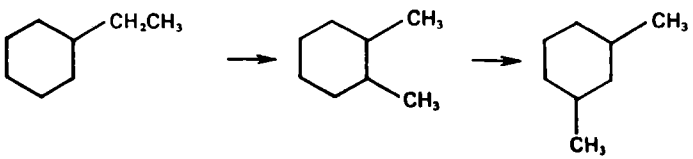

The dehydrogenation and dealkylation of cycloalkanes proceed with the redistribution of the hydrogen. As a result, arenes and alkanes accumulate in the cracking products. For example:

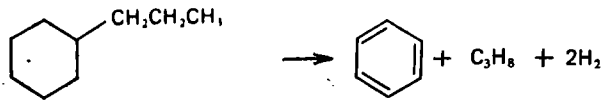

Dicyclic cycloalkanes as a result of decyclization, dehydrogenation, dealkylation, and isomerization give birth to monocyclic arenes, cyclohexanes, cyclopentanes, and alkanes.

The formation of fragments with at least three carbon atoms is characteristic of all the cycloalkane decomposition reactions, as for hydrocarbons with an open chain.

Arenes. The rate and direction of arene transformations in catalytic cracking depend to a major extent on the structure and molecular mass of the hydrocarbon being cracked.

Benzene homologues generally lose their side chains completely, which leads to the accumulation of benzene. Toluene is cracked with the greatest difficulty. With an increase in the length of the side chain and its development, the depth of dealkylation grows sharply.

Polymethylated benzene homologues are readily isomerized with the redistribution of the methyl groups. Thus, in the cracking of *p*-xylene, the reaction products were found to contain toluene, trimethylbenzene, *m*- and *o*-xylenes:

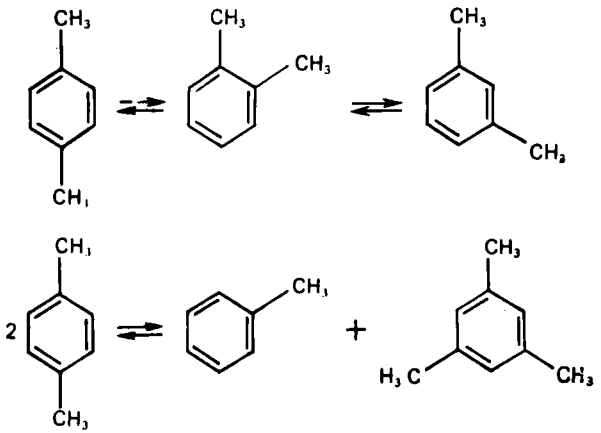

In the given case, both migration of the methyl groups along the benzene ring and their disproportionation occur under the catalytic effect of an aluminosilicate. All these reactions are reversible.

Condensed polycyclic hydrocarbons are very readily adsorbed on a catalyst and are cracked on it up to coke. The benzene does not virtually enter into the reactions and therefore accumulates in the cracking gasoline.

The features of the catalytic cracking mechanism in comparison with thermal cracking sharply affect the composition and properties of the gas and gasoline. The gas contains less low-molecular components, but much more isobutane. The gasolines are enriched in isoalkanes and arenes.

7.3. Stock, Parameters, and Products of Catalytic Cracking

The target product of a catalytic cracking process is the gasoline fraction with a high octane number. Other products are hydrocarbon gas, light gas oil (the 195-350 °C fraction), heavy gas oil, and coke. The latter, as indicated above, is deposited on the catalyst and burned out when it is regenerated. The amount and quality of the products and the amount of coke formed depend both on the quality of the stock and the process parameters.

Feed Stock. The main kinds of stock for catalytic cracking are the fractions generally boiling within the range of 200-500 °C. They

include the kerosene-gas oil fractions (200-350 °C), straight-run vacuum gas oil, and the products of secondary processes—the gas oils of coking, thermal cracking, and hydrocracking. The lighter stock goes to produce a component of base aviation gasoline, and the heavier, of motor gasoline. A mixed stock is also employed, both as regards its fractional composition (225-490 °C, 265-500 °C) and its origin. The mixed stock is used to produce motor gasoline.

The quality of the stock greatly affects the functioning of the catalysts. An increase in the content of unsaturated and polycyclic arenes in the stock or its heavier fractional composition increases coke formation and causes rapid deactivation of the catalyst. This is why it is more difficult to process coking and thermal cracking gas oils than straight-run stock. The presence of resins, sulphur- and nitrogen-containing compounds and metals in the stock also lowers the activity and selectivity of a catalyst. This is why it is sometimes necessary in the cracking of even straight-run gas oils produced from resinous and sour petroleums to limit the end of boiling of the stock to 480-490 °C. The properties of the vacuum gas oil of Romashkino petroleum—a typical feed stock of catalytic cracking, are given below as an example:

Specific gravity d_4^{20}	0.9165-0.9231
Distillation range:	
IBP, °C	345-352
10% point, °C	397-403
mid-percentage point, °C	444-456
Content, %:	
sulphur	1.79-1.88
nitrogen	0.11-0.07
nickel	$(3\text{-}4) \times 10^{-5}$
vanadium	1×10^{-3}
Carbon residue, %	0.39-0.43

Good cracking results are achieved with preliminarily hydrofined stock. Hydrofining considerably lowers the content of sulphur, nitrogen, and metals in the stock, and also coke formation. Cracking of the prepared stock lowers the yield of coke and gas and increases that of gasoline. The quality of the products improves, namely, the octane number of the gasoline is improved, and the sulphur content in the liquid cracking products is diminished to such an extent that these products require no subsequent purification from sulphur. A positive effect is also obtained by the preliminary removal of resinous and asphaltenic substances from the stock by deasphaltization with gasoline or liquefied propane.

Process Parameters. The basic parameters of catalytic cracking are the temperature, duration of contact of the stock vapour with the catalyst determined by the space velocity, and the catalyst-to-charge ratio (when operating with a moving catalyst).

Temperature. In the temperature range of 440-480 °C, the gasoline and diesel fractions form quite rapidly. A growth of the temperature is attended by a higher degree of conversion of the stock. Elevation of the temperature to 480-500 °C increases the formation of gas and coke and reduces the gasoline yield. The octane number of the gasoline grows.

Figure 48 shows the general nature of the temperature dependence of the cracking product yield.

Pressure. A catalytic cracking process is conducted under a small gauge pressure of 0.14-0.18 MPa.

Space Velocity. The duration of contact of the stock and catalyst is determined by the space velocity—the ratio of the rate of flow

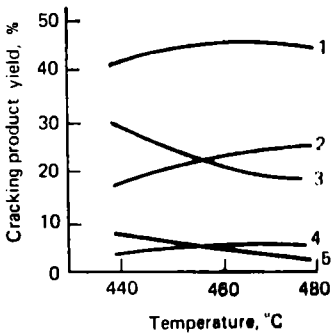

Fig. 48. Temperature dependence of cracking product yield:
1—gasoline; 2—gas; 3—light gas oil; 4—coke; 5—heavy gas oil

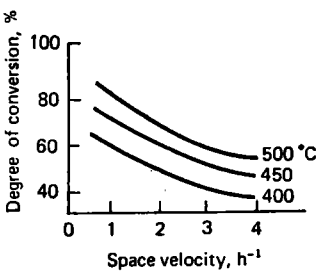

Fig. 49. Degree of stock conversion versus the space velocity when using a zeolite catalyst

of the liquid stock (in m^3/h) to the volume of the catalyst (in m^3) occupying the reaction zone. The space velocity v_v [in $m^3/(m^3 \cdot h)$ or h^{-1}] is determined by the formula

$$v_v = \frac{Q_s}{V_{cat}} \tag{7.1}$$

where Q_s is the rate of flow of the stock, m^3/h, and V_{cat} is the volume of the catalyst, m^3.

For a powdered catalyst, the value of the mass velocity of the feed stock [in $kg/(kg \cdot h)$] is employed. It is determined similar to the space velocity.

An increase in the space velocity is attended by a decrease in the degree of conversion. Such an increase can be compensated by a higher activity of the catalyst, and also by a growth in the temperature. At equal temperatures and catalyst activities, a decrease in the space velocity increases the degree of conversion (Fig. 49).

Catalyst-to-Charge Ratio. Industrial processes of catalytic cracking are conducted on a continuously circulating catalyst. The ratio of the amount of the catalyst to that of the feed stock charged into a reactor has a major influence on the process. This quantity, known as the **catalyst-to-charge ratio** (N, kg/kg) is determined by the formula

$$N=\frac{R}{B} \tag{7.2}$$

where R is the amount of the catalyst fed into the reactor, kg/h, and B is the amount of the stock fed into the reactor, kg/h.

In addition to the mass ratio, the volume catalyst-to-charge ratio N_v is employed:

$$N_v=\frac{R}{B} \tag{7.3}$$

where R and B are expressed in m³/h. The following relation exists between the mass and the volume catalyst-to-charge ratios:

$$N_v=\frac{\rho_s}{\rho_{cat}}N \tag{7.4}$$

where ρ_s is the density of the stock at 20 °C, kg/m³, and ρ_{cat} is the catalyst density, kg/m³.

An increase in the catalyst-to-charge ratio diminishes the residence time of the catalyst in the reaction zone. The amount of coke on each particle decreases. The average activity of the catalyst grows, and this increases the degree of conversion, i.e. the yield of gas, gasoline, and coke. The absolute amount of coke grows as a whole, but it is deposited on a larger number of particles.

The amount of heat introduced into a reactor, the degree of conversion of the stock, and the amount of coke deposited on the catalyst at the outlet from the reactor can be regulated by changing the catalyst-to-charge ratio. From the economical viewpoint, an increase in this ratio leads to a growth in the dimensions of the regenerator and in the operating costs for moving the catalyst. The amount of coke at the inlet to the regenerator must not exceed 0.8-1%, and the residual coke content after regeneration not over 0.25% of the catalyst. To maintain the working activity at its proper level, part of the catalyst has to be withdrawn from the system and replaced with fresh material. The rate of consumption of the catalyst is 2-2.3 kg per 1000 kg of stock.

Heat Effect. The heat effect of catalytic cracking is the sum of the heat effects of the individual reactions of the process and depends on the degree of transformation. When the latter is 80-90%, the negative heat effect of the reaction is 230-290 kJ per kilogramme of stock (Fig. 50).

Technological Conditions and Material Balance of the Process. The approximate technological conditions and material balance of the process when cracking gas oil of the 350-500 °C fraction on a spherical (I) and pulverized (II) catalyst Zeocar-2 are presented below:

	I	II
Temperature, °C	480	490
Catalyst-to-charge ratio, kg/kg	2.5	7.0
Yield of products, %:		
gas (including C_4)	20.90	19.00
including:		
isobutylene	(6.28)	(6.04)
butylenes	(2.63)	(3.16)
gasoline (fraction C_5-195 °C)	47.2	47.1
light gas oil (fraction 195-350 °C)	21.1	24.4
heavy gas oil (fraction above 350 °C)	4.7	4.2
coke	5.1	4.3
losses	1.0	1.0

The space velocity usually ranges from 1.5 for a bead to 3 h^{-1} for a microspherical zeolite-containing catalyst. The catalyst-to-charge ratio varies within broader limits, namely, from 2.5-4 on a bead catalyst to 7.5-10 on a microspherical zeolite-containing one. With light feed stock, the catalyst-to-charge ratio is higher than with heavy stock.

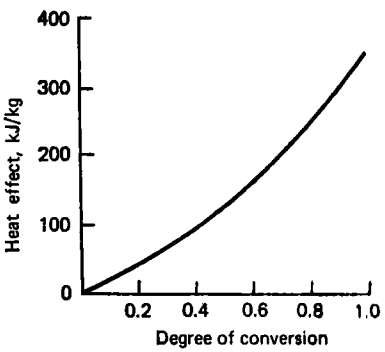

Fig. 50. Heat effect of the catalytic cracking of vacuum gas oil of Romashkino petroleum versus the degree of stock conversion (the yield of the fraction up to 350 °C) on a type АШНЦ-3 catalyst

Catalytic Cracking Products. The *hydrocarbon gases* of catalytic cracking contain at least 75-80% of a mixture of propane-propylenes, butane-butylenes, and pentane-amylenes. The content of isomeric compounds reaches 25-40%. This makes the gases of catalytic cracking a valuable raw material for the petrochemical industry.

The *gasoline* has a specific gravity of 0.72-0.77 and an octane number by the research method from 87 to 91. This gasoline differs in its chemical composition from the straight-run and thermal cracking ones. It contains 8-15% of unsaturated hydrocarbons and 20-30% of arenes. The unsaturated hydrocarbons and arenes consist by at least two-thirds of hydrocarbons with an isomeric structure.

The *light gas oil* (the 195-350 °C fraction) has a specific gravity of 0.89-0.94 and contains 40-80% of arenes. The cetane number ranges from 45 to 24. The light gas oil with a high cetane number is em-

ployed as a component of diesel fuel, and with a low cetane number as a diluent of fuel oil. Both the gasoline and gas oil produced from sour stock require purification from sulphur.

The *heavy gas oil* (the fraction above 350,°C)—the residual liquid product of catalytic cracking—is used as a component of fuel oil or as the stock of coking plants. The sulphur content in it is higher than in the initial stock.

The high content of polycyclic arenes (40-60%) makes the gas oils of catalytic cracking a valuable source for the production of individual arenes (naphthalene, phenanthrene); simultaneously, the 280-420 °C fraction is employed for the separation of a highly aromatized concentrate from it—a stock for the production of technical carbon. A selective solvent—furfural—is used for this purpose (see Secs. 10.2 and 10.4). The 280-420 °C fraction is separated into a dearomatized raffinate directed into diesel fuel, and an extract that is the stock for the production of technical carbon.

7.4. Catalytic Cracking Plant with Bead Catalyst

Catalytic cracking plants with an aluminosilicate catalyst can be divided into four types:

(1) with a stationary bed of tabletted catalyst and batch reactors;

(2) with a dense layer of a circulating bead catalyst and a continuous reactor and regenerator;

(3) with a fluidized bed of a circulating microspherical or powdered catalyst and a continuous reactor and regenerator;

(4) with a lift reactor.

A plant of the first type is intended for a batch process. It has several reactors, in each of which the entire operation cycle takes place during 30 minutes. The cycle includes the cracking reaction, withdrawal of the petroleum vapour, regeneration of the catalyst, and removal of the air and combustion products.

Catalytic cracking plants with a stationary catalyst have never become popular.

Flow Diagram (Fig. 51). A catalytic cracking plant with a dense layer of a circulating bead catalyst has two main apparatus: a reactor for the continuous catalytic cracking of the stock and a regenerator for the continuous removal of the coke from the catalyst surface.

The catalyst in the form of beads 3-5 mm in diameter is spilled over from separator bunker *25* of gas lift *8* into the bunker of reactor *7*, and uniformly passes in a dense layer through the reaction zone, the zone of cracking product disengaging, and the stripping zone. After this, the catalyst is removed from the reactor, enters batcher *28* of a gas lift, and is lifted by the flue gases along the upcomer into separator bunker *26*. Here the flue gases separate and are discharged into the atmosphere, while the catalyst is spilled into the bunker

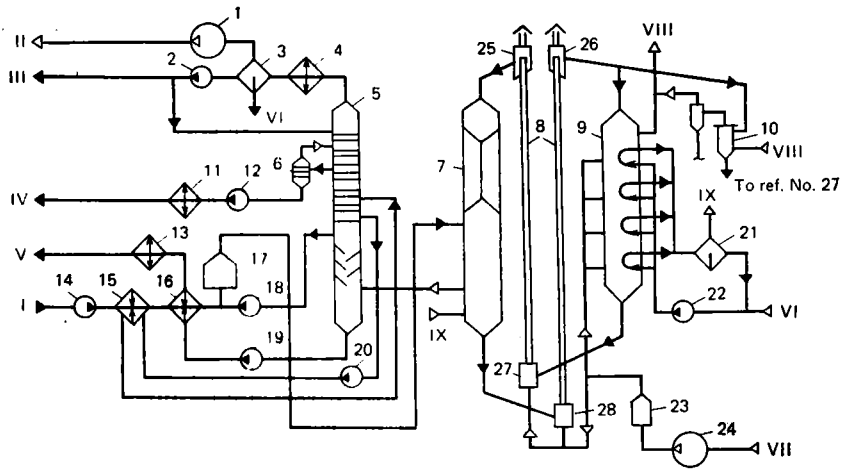

Fig. 51. Flow diagram of a catalytic cracking plant with a moving bead catalyst:

1—compressor; *2*, *12*, *14*, *18-20*, *22*—pumps; *3*, *10*—separators; *4*, *11*, *13*—coolers; *5*, *6*—columns; *7*—reactor; *8*—gas lift; *9*—regenerator; *15*, *16*—heat exchangers; *17*, *23*—furnaces; *21*—steam collector; *24*—air blower; *25*, *26*—separator bunkers; *27*, *28*—batchers of gas (air) lifts; *I*—feed stock; *II*—combination gas; *III*—gasoline; *IV*—195-350 °C fraction; *V*—fraction above 350 °C; *VI*—water; *VII*—air; *VIII*—flue gases; *IX*—steam

of regenerator *9*. The catalyst passes downward through the regenerator sections. Air is fed into each section for burning out the coke. The regenerator sections are provided with coils for removing the regeneration heat by the formation of steam. The regenerated catalyst is spilled into batcher *27* of a gas lift and rises along the catalyst pipe into separator bunker *25*. The catalyst crumbs are blown away in separator *10*. Air is fed into the regenerator and for transportation of the flue gas into a gas lift by blowers under pressure after being heated in furnaces (only one furnace *23* and blower *24* are shown in the diagram). The steam produced in the regenerator flows into steam collector *21*, and is then spent for the needs of the plant.

The stock is fed by pump *14* through exchangers *15* and *16* into furnace *17*, where it is heated to the temperature of the reaction and evaporates. The stock vapours flow into the reaction zone of reactor *7*, where they come into contact with the catalyst moving downward. The vapours of the cracking products and the steam fed into the reactor for stripping the catalyst are removed from the reactor through a special device and are directed into the bottom part of rectification column *5*.

Gasoline vapour, steam, and a combination gas are discharged from the top of column *5*. This mixture after condensation and cooling in cooler *4* is separated in separator *3* into gasoline, water, and

combination gas. Compressor *1* discharges the gas to the gas-fractionating plant, the gasoline is partly refluxed by pump *2* to column *5*, while the remaining part of the gasoline is fed to the stabilizer plant. The light gas oil (the 195-350 °C fraction) is fed from column *5* into stripping column *6* where it is stripped by steam, after which it is withdrawn from the plant via cooler *11*. The heavy gas oil (the fraction above 350 °C) is pumped by pump *19* from the bottom of column *5* and after being cooled in exchanger *16* and cooler *13* is also withdrawn from the plant.

Equipment. The *reactor* of a Soviet catalytic cracking plant with a capacity of 800 tonnes of fresh stock a day is a cylindrical apparatus made from carbon steel with an internal alloy steel lining. The diameter is about four metres and the volume of the reaction zone is 30-50 m^3 (Fig. 52). The reactor end plates are elliptical. The centre of the top end plate is provided with a pipe connection for feeding in the catalyst from a bunker installed above the reactor. The height of the reactor with the bunker is 41 m. The connecting pipe is joined to the top distributor that by means of overflow pipes distributes the catalyst uniformly over the entire cross section of the reactor.

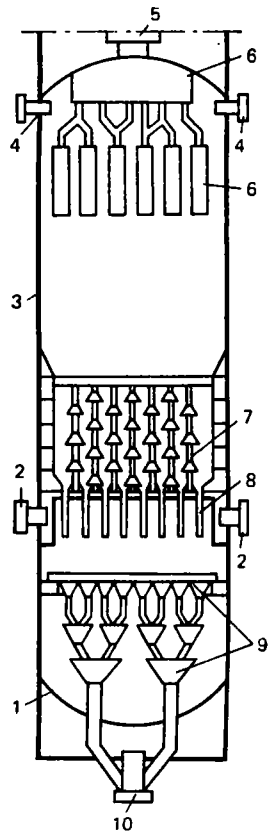

Fig. 52. Reactor of a catalytic cracking plant with a bead catalyst:

1—end plate; *2*—pipe connections for the discharge of vapour; *3*—housing; *4*—pipe connections for feeding in the stock; *5*—pipe connection for feeding in the catalyst; *6*—top catalyst distributor; *7*—sleeves for withdrawing vapour ("garlands"); *8*—overflow pipes for the catalyst; *9*—bottom catalyst distributor; *10*—pipe connection for removing the catalyst

The feed stock vapours are introduced into the top part of the reactor through pipe connections. The vapours uniformly contact the catalyst flowing downward through the reaction zone. Under the reaction zone is a separating device for withdrawing the reaction products. It consists of a garland of sleeves with slots protected by caps from entrance of the catalyst. The bottom open ends of all the

sleeves are connected to a collecting chamber from which the product vapours are withdrawn from the reactor through pipe connections. At a lower level, there is a zone for stripping the hydrocarbon vapours adsorbed on the catalyst by steam fed in through a special pipe connection. The dead catalyst is withdrawn from the reactor through a flow equalizer.

The *regenerator* is an apparatus with a square cross section of 3 × 3 m and 27 m high made from carbon steel with an internal lining of refractory brick. The regenerator has 11 zones, each of which is provided with means for supplying air, discharging the flue gases, and coils for removing heat. Water circulates in the coils, and it partly transforms into steam. All the coils are connected to a common waste-heat boiler. The maximum burning out temperature of 720 °C is observed in the middle part of the apparatus. At the inlet and outlet of the catalyst, as in the reactor, there are a distributor and a flow equalizer. The capacity of a regenerator is characterized by the amount of coke removed in kg/(h·m³), i.e. the amount of coke burned out in unit time per unit of reaction volume. For plants with a bead catalyst, this quantity is 12-14 kg/(h·m³).

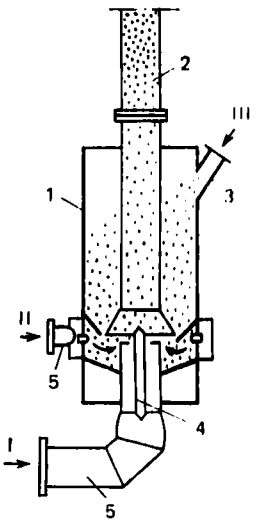

Fig. 53. Batcher of a gas (air) lift: *1*—housing; *2*—upright of lift; *3*—pipe connection for feeding in the catalyst; *4*—guide; *5*—pipe connection for supplying air; *I*—primary air; *II*—secondary air; *III*—catalyst

The catalyst is moved from the reactor to the regenerator by the flue gases, and from the regenerator to the reactor by hot air. The bottom part of a gas (air) lift (Fig. 53) called a **batcher** helps the catalyst get into the stream of gas. The velocity of the gas stream with the catalyst is 14-20 m/s.

Process Control and Regulation. Under steady-state conditions for a definite kind of stock, quite a number of parameters have to be controlled and kept constant. They include the rate of flow of the stock through the plant, the temperature in the reactor and at the outlet of the stock from the furnace, and the degree of coke deposition on the catalyst. The temperature at the outlet of the stock vapours from the furnace is regulated by changing the amount of fuel fed into the furnace; the temperature in the reactor and the degree of coke deposition on the catalyst are controlled by varying the catalyst-to-

charge ratio, and the temperature of burning out the coke in each regenerator section is regulated by adjusting the supply of water into the coils of the sections and of air into each section. It is important to control the level of the catalyst in the bunkers of the reactor, regenerator, and gas lifts. This is based on measuring the permittivity of the catalyst.

Plant Reconstruction. During recent years, plants with a moving bead catalyst designed and erected for an amorphous aluminosilicate

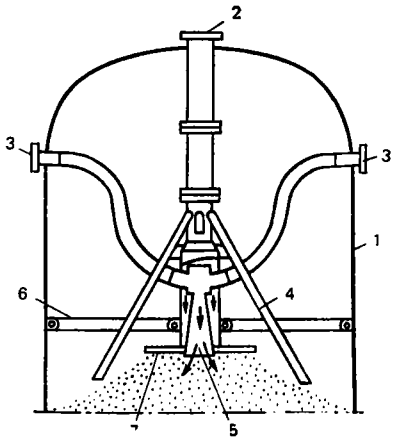

Fig. 54. Heavy stock inlet:
1—reactor housing; *2*—pressurized downcomer; *3*—pipeline for stock; *4*—equalizing catalyst pipe; *5*—diffusor; *6*—tie rods; *7*—baffle plate

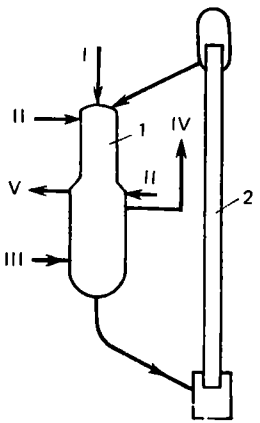

Fig. 55. Flow diagram of a plant with a moving bead catalyst after reconstruction:
1—combined reactor-regenerator (the reactor is above the regenerator); *2*—gas lift for single lifting; *I*—feed stock; *II*—steam; *III*—air; *IV*—flue gases; *V*—reaction products

catalyst are being converted to considerably more active and selective zeolite-containing catalysts on which, first, much more gasoline is produced and, second, coke. If the plants are not reconstructed, they have to be operated under milder conditions or with a lower output. Several variants of plant reconstruction can be implemented for the complete utilization of the possibilities inherent in zeolite-containing catalysts. For example, in one variant, the heavy stock inlet has been reconstructed (Fig. 54), the volume of the reaction zone has been reduced to 30-40 m^3, two or three sections have been added to the regenerator, and the cooling surface of the condensers for the overhead product of the rectification column has been increased.

Figure 55 presents a flow diagram of another reconstruction variant increasing the capacity of the gas lift about four times, and the capacity of the plant as a whole 1.5 times.

7.5. Catalytic Cracking Plant with Powdered Catalyst

The features of these plants include the use of a powdered or microspherical catalyst, the way of handling it, and the presence of a fluidized bed in the reactor and regenerator. The catalyst is prepared in the form of minute beads (20-80 μm) or particles of an irregular shape 10-120 μm in size (pulverized).

The same stock is employed for plants with a fluidized bed as for ones with a moving bead catalyst. The quality of the products in both cases is the same.

Flow Diagram (Fig. 56). The stock is delivered by pump *18* through exchangers *19*, *22*, *24*, and *26* into furnace *27*. The heated stock is mixed with the circulating gas oil delivered from the bottom of the rectification column. The mixture of the stock and the recirculated material is fed into the riser of the catalyst pipe along which it rises together with the catalyst into reactor *6*. The catalytic cracking process begins already in the riser and terminates in the fluidized bed of the reactor.

The vapours of the reaction products and the steam fed into the stripping zone of the reactor leave through the top pipe connection of the reactor and flow into the bottom part of rectification column

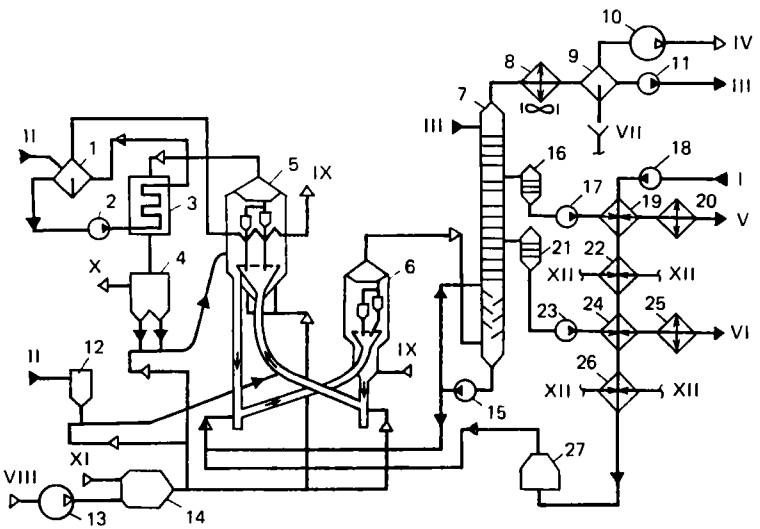

Fig. 56. Flow diagram of a plant with fluidized microspherical catalyst bed: *1*—separator; *2*, *11*, *15*, *17*, *18*, *23*—pumps; *3*—waste-heat boiler; *4*—electrical filter; *5*—regenerator; *6*—reactor; *7*, *16*, *21*—columns; *8*, *20*, *25*—coolers; *9*—separator; *10*—compressor; *12*—catalyst bin; *13*—air blower; *14*—furnace; *19*, *22*, *24*, *26*—heat exchangers; *27*—furnace; *I*—feed stock; *II*—catalyst; *III*—gasoline; *IV*—combination gas; *V*—195-350 °C fraction; *VI*—fraction above 350 °C; *VII*—water; *VIII*—air; *IX*—steam; *X*—flue gases; *XI*—fuel gas; *XII*—circulating reflux of column *7*

7. The gas, gasoline vapour, and steam from the top of column *7* flow into condenser and cooler *8*, and thence after condensation into a separator, where they are separated into a water layer, a gasoline layer, and gas. The latter is fed by compressor *10* to a gas fractionating plant, the gasoline is directed by pump *11* partly to the top of column *7* as a reflux and the remaining amount to the stabilizer. The side-cut fractions of column *7* (the 195-350 °C fraction and the one above 350 °C) are fed to the relevant stripping sections *16* and *21*, where they are stripped with steam. The 195-350 °C fraction is fed by pump *17* for cooling in stock heat exchanger *19*, cooler *20*, and is discharged from the plant. The fraction above 350 °C is delivered by pump *23* for cooling in stock heat exchanger *24* and cooler *25* and is also discharged from the plant. Pump *15* delivers the sludge—heavy gas oil with catalyzer dust suspended in it—from the bottom of column *7* into reactor *6*.

The catalyst from the fluidized bed of the reactor slowly sinks into the stripping zone into which steam is fed. The petroleum vapours adsorbed by the catalyst surface are removed by the steam. Next the catalyst enters the catalyst duct and drops into the unit for mixing it with air. The air stream lifts the catalyst into regenerator *5* along the rising line of the catalyst duct. The main part of the air for burning out the coke is fed directly into the regenerator. Steam or water is fed into the regenerator coils for removing the surplus heat. The flue gases formed when the coke is burned out flow into waste-heat boiler *3*, give up their heat, and are directed into electrical filter *4* for trapping the catalyst dust, after which they are discharged into the atmosphere. Furnace *14* is used for heating the air under pressure.

Equipment. The *reactor* is a cylindrical apparatus made from carbon steel with an internal protective lining. Three main zones—the reaction, stripping, and settling ones—can be singled out in it.

The reaction zone is filled with a fluidized catalyst bed 5-6 m deep with a density of 400-450 kg/m^3.

The bottom part of the section is provided with a distributing grid to produce a fluidized bed.

The stripping section is below the fluidized bed, has a smaller diameter than the entire reactor, and is provided with partitions in the form of angles welded on in staggered order to improve the contact of the steam and catalyst. The catalyst spends about three minutes in the stripping section. The latter can also be designed as a separate unit.

The settling zone is above the fluidized bed. Here the product vapours are separated from the entrained catalyst. The top part of the settling zone accommodates the cyclone separators. The vapours of the cracking products after leaving the reactor pass through cyclone separators and are finally freed of the catalyst. The removed cat-

alyst is returned from the cyclones to the bottom of the fluidized bed.

The *regenerator* is a cylindrical apparatus 12 m in diameter and 30 m high with conical end plates. Its useful volume is 680 m³. The depth of the fluidized bed is 6 m. The housing is lined inside with refractory bricks (Fig. 57).

From 12 to 15 kg of air are used for each kilogramme of coke burned off the catalyst surface. About 20% of the air is fed together with the catalyst via the air lift. The remaining air needed for burning out the coke is fed in directly under the fluidized bed grid. The coke is burned out with insufficient air, therefore the flue gases contain a large amount of carbon monoxide. This technique makes it possible to increase the rate of burning out the coke, diminish the supply of air to the regenerator, lower the evolution of heat when the coke burns, improve the removal of the excess heat, and reduce the cross-sectional area of the apparatus.

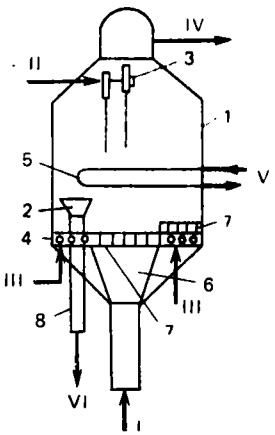

Fig. 57. Diagram of a regenerator: *1*—housing; *2*, *6*—funnels; *3*—cyclones; *4*—ducts and master batches; *5*—cooling coils; *7*—distributing grid; *8*—catalyst duct; *I*—coked catalyst and air; *II*—steam; *III*—air; *IV*—flue gases; *V*—water; *VI*—live catalyst

Burning takes place in the fluidized bed and terminates in 5-7 min. The amount of coke removed is 20-45 kg per hour for every tonne of catalyst.

The settling zone with cyclones is above the fluidized bed. The flue gases passing through the cyclones are freed of the entrained catalyst. The heat of the flue gases, and also the heat obtained as a result of the burning of the CO to CO_2 is utilized in the waste-heat boiler for producing steam.

The *rectification column* has no stripping zone. The bottom part of the column accommodates cascade plates. The vapours from the reactor fed into the column under the cascade plates are cooled and washed with heavy gas oil to remove the catalyst. A suspension of the catalyst in the heavy gas oil—a sludge—accumulates in the bottom part of the column. It is recycled to the column together with the stock of the plant. The excess heat is removed from the column by two reflux streams.

Process Control and Regulation. The basic parameters are regulated automatically. The temperature in the reactor depends on that of the stock, and on the temperature and amount of circulating catalyst. To stabilize the operation of the entire apparatus, the

amount of stock fed into the plant is kept constant. The temperature of the stock at the outlet from the furnace is also kept constant by regulating the supply of fuel to the furnace. The temperature in the fluidized catalyst bed is determined by the rate of flow of the catalyst from the regenerator to the reactor.

The conditions in the regenerator depend on the temperature, pressure, amount of air fed into the regenerator, and the amount of coke deposited on the catalyst. Elevation of the temperature in the regenerator may lead to overburning of the catalyst, while lowering of the temperature to below the preset value may lead to incomplete burning out of the coke. The temperature in the regenerator is kept constant by changing the supply to the regenerator coils of saturated steam from which superheated steam with a definite temperature is obtained. The rate of flow of the air is kept constant.The pressure in the reactor and regenerator must be constant, although not the same, because otherwise circulation of the catalyst is disturbed. The pressure in the regenerator is maintained by a valve on the line discharging the flue gases into the waste-heat boiler, and the pressure in the reactor, by a valve on the line removing the hydrocarbon gases of the reaction from the gasoline separator (of the rectification column).

Plant Starting. The first step in starting a plant is to set up a fluidized bed in the reactor and regenerator with the aid of hot air and heat the catalyst by injecting fuel into the regenerator. After the achievement of a normal bed depth and a temperature of 480 °C in the regenerator, the fluidized bed and the transportation lines of the reactor are transferred from air to superheated steam. When the temperature of the stock in the fractionating part of the plant reaches 400 °C, the stock can be fed into the reactor, and the plant can be brought out to its normal operating conditions.

Safety Engineering. In the operation of catalytic cracking plants with a fluidized bed, emergencies may arise, first of all when the circulation of the catalyst is improper. For example, lowering of the catalyst level in the reactor allows air to get into the reactor from the regenerator through the transportation line, and this may cause a fire or explosion. A drop in the catalyst level in the regenerator may allow stock vapours to penetrate into it, which may cause a fire in the regenerator. Consequently, when the catalyst level in one of these apparatus drops, the pneumatic transportation facilities must be switched off, catalyst added to the reactor or regenerator, and only then may the circulation be restored.

Technical and Economical Indices. The approximate technical and economical indices of a fluidized bed catalytic cracking plant are given below per tonne of stock:

Liquid fuel, kg	6.72
Gaseous fuel, kg	9.50
Electrical energy, MJ	320

Microspherical catalyst, kg	1.9
Consumption of steam at pressure of 0.8 MPa, kg	270
Production of steam, kg:	
at 4.7 and 3.8 MPa	635
at 0.12 MPa	50

Reconstruction of Plant. The replacement of an amorphous catalyst with a zeolite-containing one in catalytic cracking plants with a fluidized bed made it necessary to additionally equip the reactor and regenerator. A "sleeve" was installed in the reactor on the distributing grid that sharply reduced the reaction volume, approximately to one-fifth of its former value. The sleeve is a continuation of the transportation line.

Plants with a Lift-Reactor. The introduction of zeolite-containing catalysts introduced considerable alterations into the design of the reactor unit. The high activity of the zeolites made it possible to completely or partly do without the fluidized bed and use reactors of the lift type in which the particles of the catalyst move upward together with the vapours of the reacting liquid in what is called a semi-through flow (such a flow has a velocity up to 2.5 m/s, while a through flow has a velocity above 2.5 m/s).

Figure 58 depicts two variants of lift-type reactors. A schematic diagram of a plant with a lift reactor (43-107) is shown in Fig. 59.

The stock passes through a hydrofining unit, after stabilization is heated in heat exchangers and furnace *1* and flows into column *2* for distilling off the light fractions formed in hydrofining. The residue after distillation, having an initial boiling point of about 200 °C, is fed by pump *8* through furnace *1* to the base of lift reactor *11*. The temperature in the reactor is 515-545 °C, and the duration of contact is several seconds. The regenerated catalyst from regenerator *6* is also spilled to the bottom of reactor *11*, and steam is fed into the latter at its bottom.

The catalyst suspended in the mixture of stock vapours and steam enters reactor *10* through the grid at the end of reactor *11*. Here the vapours of the cracking products are separated from the catalyst, which is spilled into the stripping section. The stripped catalyst is spilled along the inclined catalyst line into regenerator *6*. Air blower *9* supplies the air for regeneration. The regeneration temperature is 700 °C, the pressure is 2.5 MPa, the intensity of burning out the coke is 80 kg/(tonne·h), the velocity of the gases over the bed is 0.9-1.0 m/s (instead of 0.4-0.6 m/s used earlier). The regenerator has no steam coils for removing the excess heat.

The heat balance of the reactor unit is regulated by changing the $CO:CO_2$ ratio. The vapours of the cracking products from reactor *10* flow into the fraction-separating section of the plant.

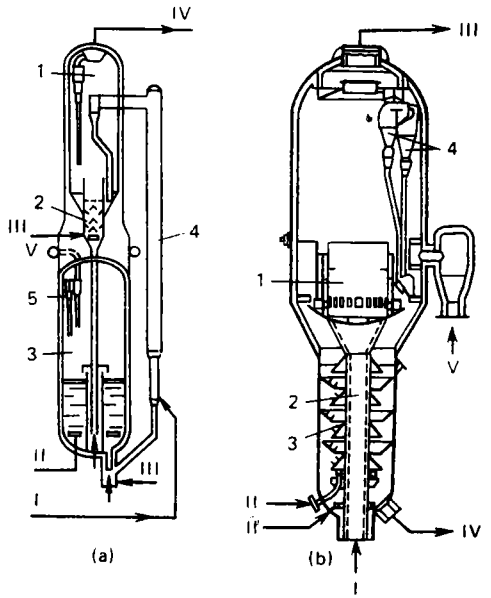

Fig. 58. Variants of reactors of the lift type:

(*a*): *1*—reactor and catalyst separator; *2*—stripping section; *3*—regenerator; *4*—lift reactor of fresh stock; *5*—cyclones; *I*—feed stock; *II*—air; *III*—steam; *IV*—reaction products; *V*—flue gases; (*b*) Reactor of plant 43-107: *1*—zone of fluidized bed; *2*—lift reactor; *3*—stripping section; *4*—cyclones; *I*—feed stock and catalyst; *II*—steam; *III*—reaction products; *IV*—dead catalyst; *V*—sludge

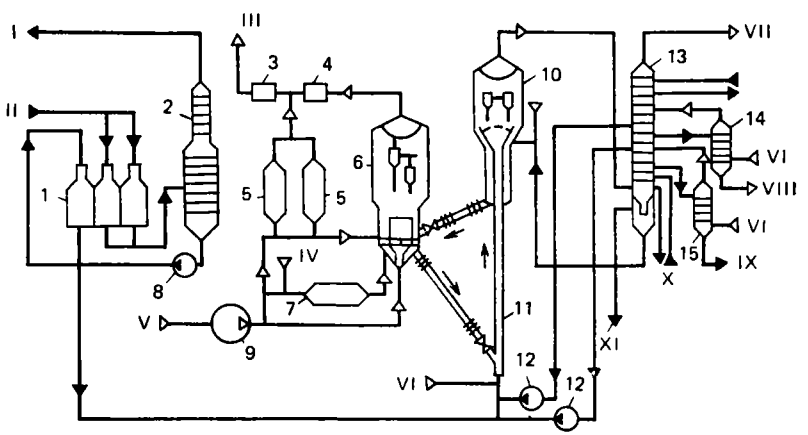

Fig. 59. Diagram of catalytic cracking plant 43-107 with preliminary hydrofining of stock:

1—furnace; *2*, *13-15*—columns; *3*—electrical filter; *4*—waste-heat boiler; *5*—catalyst tanks; *6*—regenerator; *7*—furnace under pressure; *8*, *12*—pumps; *9*—air blower; *10*—reactor with fluidized bed; *11*—pneumatic elevator; *I*—hydrofined gasoline; *II*—hydrofined stock; *III*—combustion products; *IV*—fuel; *V*—air; *VI*—steam; *VII*—gas, gasoline, steam; *VIII*—light gas oil; *IX*—heavy gas oil; *X*—circulating residue; *XI*—residue above 420 °C

7.6. Catalytic Reforming Mechanism and Catalysts

In 1911, Zelinsky and his school by discovering the reaction of conversion of six-membered cycloalkanes into arenes on a platinum and palladium catalysts laid the scientific cornerstone of the catalytic reforming process. In 1936, the reaction of conversion of alkanes into arenes was discovered simultaneously in three laboratories in the Soviet Union: Moldavsky and Kamusher conducted this reaction at 450-470 °C on chromium oxide, Karzhev *et al* conducted it at 500-550 °C on a copper-chromium catalyst, and Kazansky and Plateh conducted it using platinum on activated carbon at 304-310 °C. These reactions were called **dehydrocyclization.**

The following basic reactions proceed under the conditions of catalytic reforming:

the dehydrogenation of six-membered cycloalkanes:

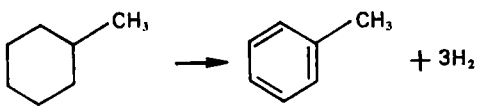

the dehydroisomerization of five-membered cycloalkanes:

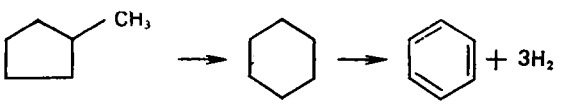

the dehydrocyclization of alkanes:

$$C_7H_{16} \rightarrow C_6H_5CH_3 + 4H_2$$

the cyclodehydrogenation of alkenes:

$$C_7H_{14} \rightarrow C_6H_5CH_3 + 3H_2$$

In addition to the above reactions leading to the accumulation of arenes, the following also occur: the cracking of alkanes with the subsequent hydrogenation of the fragments; isomerization of alkanes; isomerization of the side chains of arenes; the destruction of organic compounds containing sulphur, nitrogen, oxygen, and metal substituents; and the reactions of condensation of arenes and alkenes.

The condensation reactions result in the formation of coke and its deposition on the catalyst, owing to which the latter is deactivated. This is why the process is conducted in hydrogen.

A glance at the equations of the dehydrogenation and dehydrocyclization reactions reveals that by Le Chatelier's principle and the law of mass action, an increase in the pressure of the hydrogen

should shift the equilibrium of these reactions to the left:

$$C_6H_{12} \rightleftharpoons C_6H_6 + 3H_2$$

$$C_6H_{14} \rightleftharpoons C_6H_6 + 4H_2$$

At the same time, experiments show that when the hydrogen pressure is higher, less coke is deposited. It is exactly these two contradicting circumstances that dictate the choice of the partial hydrogen pressure in a variant of the industrial process.

Catalysts. At present, catalytic reforming plants operate with the use of bifunctional catalysts combining acidic and dehydrogenating-hydrogenating functions. Platinum or polymetallic catalysts are employed in the industry. Alumina promoted by fluorine or chlorine is the carrier of the platinum or polymetals. The platinum alone or combined with cadmium and rhenium is active in reactions of hydrogenation and dehydrogenation, while the alumina is active in reactions of isomerization and hydrocracking.

Polymetallic catalysts allow the pressure of the process to be lowered.

Stationary tableted platforming catalysts are characterized below:

Grade	АП-56	АП-64	КР-104
Composition, %:			
Pt	0.55	0.62	0.36
Cd	—	—	0.45
Re	—	—	0.20
F	$\leqslant$0.025	—	—
Cl	—	0.65	1.35
Bulk density, kg/dm^3	0.61	0.61	0.63
Catalytic activity (octane number of debutanized gasoline by motor method)	$\geqslant$77	$\geqslant$77	$\geqslant$86

These catalysts exhibit a high activity and selectivity under the conditions of the process and can operate with stability without regeneration from six months to one year. When its activity is lost owing to substantial coke deposits, the catalyst is regenerated by the oxidizing method (see Sec. 7.8).

As already noted above, compounds of sulphur, nitrogen, metals, and also water supplied together with the stock detract from the selectivity and diminish the service life of platinum catalysts. This is why the platforming stock is subjected to hydrofining and drying. An aluminium-cobalt-molybdenum catalyst and the catalyst АП-15 with a reduced platinum content are used as hydrofining catalysts. The degree of removal of the sulphur- and nitrogen-containing compounds depends on the sensitivity of the catalysts. For the catalyst АП-56, the residual sulphur content in the stock is 0.001%; the catalyst АП-64 requires more thorough preparation of the stock, while especially rigorous requirements to the quality of the stock and auxiliary materials are tendered by polymetallic multifunctional

catalysts (the residual content of sulphur and nitrogen in the stock must be 0.0001-0.0005%).

A chlorine promoter is readily hydrolyzed in the presence of even small amounts of water. The optimal chlorine content can be maintained in a catalyst, firstly, by lowering the moisture content of the circulating gas, and, secondly, by replenishing the chlorine losses by feeding an organochlorine compound into the reaction zone. For example, dichloroethane is fed together with the stock into all three reforming stages in proportion to the distribution of the catalyst in the reactors in an amount of 0.0001-0.0002% reduced to its chlorine content.

7.7. Stock, Parameters, and Products of Catalytic Reforming

Catalytic reforming on a platinum catalyst (platforming) is one of the most important processes in the petroleum refining and petrochemical industries. It occupies the leading place in the production of both high-octane gasolines and arenes—benzene, toluene, and xylenes.

It should also be noted that the use of a hydrogen-containing gas—a reforming by-product—facilitated the widespread introduction of the petroleum product hydrofining process into the industry.

Catalytic reforming plants produce a hydrocarbon gas, aromatized gasoline, and a hydrogen-containing gas.

The yield and composition of the catalytic reforming products depend on the properties of the catalyst and the stock and on the interrelated parameters of the process, namely, the temperature, pressure, space velocity of stock feeding, and the hydrogen-containing gas-to-stock ratio.

Stock. Gasoline fractions with an initial boiling point of 60 °C and above and an end boiling point of not over 180 °C are employed as the catalytic reforming stock. It does not pay to reform gasolines with an initial boiling point below 60 °C because the IBP-60 °C fraction contains neither cycloalkanes nor alkanes capable of transforming into arenes, but only contains hydrocarbons with less than six carbon atoms that transform into a hydrocarbon gas. These are ballast fractions increasing the load on the plant and the yield of gas, hydrogen being consumed for gas formation.

When the fractional composition of the stock is raised to above 180 °C, more coke is deposited on the catalyst, which reduces the service life of the latter under the reaction conditions.

Depending on the designation of a plant, gasoline fractions with different boiling ranges are used. The 85-180 °C and 105-180 °C fractions are used to produce high-octane gasoline; the 60-85 °C fraction is used to produce benzene, the 85-105 °C one—toluene, and the

105-140 °C one—xylenes. The 62-140 °C fraction is used to produce a mixture of benzene, toluene, and xylenes, while the 62-180 °C fraction is used to simultaneously produce both arenes and high-octane gasoline.

In the production of high-octane gasolines, especially with an octane number of 95-100, it is good practice to use a heavier fractional composition with an initial boiling point of 105 °C as the stock for catalytic reforming because this makes it possible to boost the yield of reforming gasoline and simultaneously of hydrogen (Fig. 60).

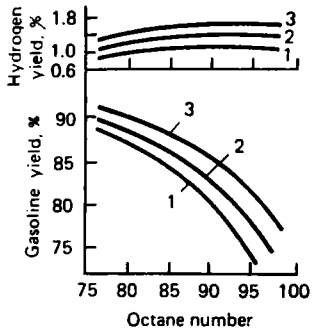

Fig. 60. Relation between the octane number of reforming gasoline from Romashkino petroleum, its yield and the hydrogen yield:
1—60-180 °C fraction; *2*—85-180 °C fraction; *3*—105-180 °C fraction

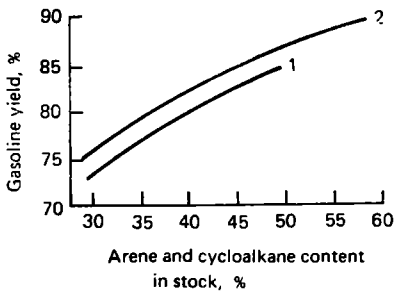

Fig. 61. Yield of reforming gasoline with an octane number of 95 versus the hydrocarbon content of the stock:
1—85-180 °C fraction; *2*—105-180 °C fraction

The hydrocarbon composition of the stock affects the yield of reforming gasoline and its arene content, as well as the hydrogen yield in the reforming process and the heat effect of the reaction. The yield of the reforming gasoline grows when the stock contains more cycloalkanes and arenes (Fig. 61). The stock and reforming gasoline are characterized in Table 9, while the dependence of the hydrogen yield on the cycloalkane content is shown in Fig. 62.

Process Parameters. The *heat effect of a reaction* depends chiefly on the cycloalkane content in the stock because it is just the reactions of cycloalkane dehydrogenation that are attended by the intensive absorption of heat. If for an alkane stock the negative heat effect is 295-364, then for a cycloalkane stock it is 410-670 kJ per kilogramme of stock.

Since the reaction heat is taken from the gas-stock mixture, the temperature of the latter drops. This explains why heat has to be supplied to the reaction mixture. It thus becomes necessary to distribute the catalyst between several reactors and heat the gas-stock mixture in the furnace sections between them. In the first reactors,

Table 9. **Properties and Composition of Stock and Products in the Reforming of 85-180 °C and 105-180 °C Fractions of Selected Petroleums for Producing Gasoline with an Octane Number of 95 (I — Arlan, II — Ust-Balyk, III — Romashkino, IV — Kotur-Tepe Petroleum)**

Indices	85-180 °C fraction			105-180 °C fraction		
	I	II	III	I	III	IV
Stock						
Specific gravity, d_4^{20}	0.738	0.736	0.742	0.750	0.750	0.772
Hydrocarbon composition, %:						
arenes	6.5	7.4	10.0	7.4	12.2	11.0
cycloalkanes	26.0	27.4	27.0	23.1	26.0	48.0
alkanes	67.5	65.2	63.0	69.5	61.8	41.0
Octane number	37.0	—	39.5	25.5	39.0	55.0
Reforming gasoline						
Specific gravity, d_4^{20}	0.785	0.789	0.796	0.798	0.795	0.804
Hydrocarbon composition, %:						
unsaturated	1.2	0.9	0.8	0.9	0.7	0.5
arenes	64.5	64.7	65.5	65.4	67.5	68.5
saturated	34.5	34.4	33.7	33.7	31.8	31.0
Yield, %:						
stable gasoline	75.0	76.5	77.7	76.0	81.0	88.3
hydrogen	1.2	1.2	1.3	1.3	1.6	2.2

the most heat is absorbed because the stock contains the largest amount of cycloalkanes, and, conversely, in the last reactors the

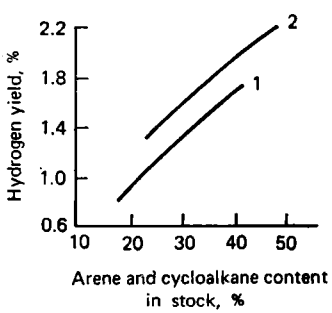

Fig. 62. Yield of hydrogen versus the content of cyloalkanes in the stock: *1*—85-180 °C fraction; *2*—105-180 °C fraction

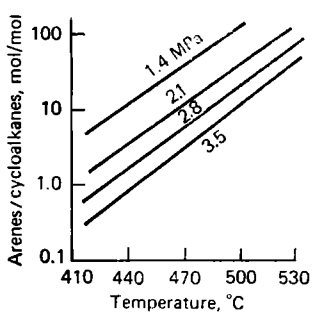

Fig. 63. Temperature dependence of the ratio of the equilibrium arene and cycloalkane concentrations at various partial pressures of the hydrogen

least heat is absorbed. To allow the heat to be supplied more uniformly, the catalyst is distributed unevenly between the reactors, its amount growing from the first reactor receiving the stock to the

last one. Hence, the overall extent of aromatization depends on the proper distribution of the catalyst between the reactors. The ratio of the catalyst charge by reactors can be 15:35:50, 1:2:4, 1:3:7, and so on.

The process *temperature* ranges from 470 to 525 °C. Lowering of the temperature with unchanging volume flow rate and pressure increases the gasoline yield, reduces the gas yield and coke formation, but simultaneously reduces the amount of arenes in the produced gasoline (Fig. 63).

The *space velocity* is generally 1-2 h^{-1}. Lowering of the velocity, other conditions being equal, gives the same effect as elevation of the temperature, namely, a lower reformate yield, a higher arene content in it, a higher gas yield, and more coke deposits on the catalyst. Too low velocities are not economical because this requires an increase in the reactor volume. The influence of the space velocity on the yield and quality of the catalysate in reforming of the 120-180 °C fraction at 495 °C is illustrated by the following data:

Space velocity, h^{-1}	0.5	1.0	1.5	2.0
Yield of stable catalysate, %	64.5	78.2	81.0	83.0
Specific gravity of catalysate, d_4^{20}	0.788	0.787	0.786	0.784
Arene content, %	66.8	65.2	62.5	60.0

The *pressure* of the hydrogen-containing gas plays a very major role in a catalytic reforming process because an increase in the pressure (2-4 MPa) is attended by a sharp drop in the rate of gas and coke formation. At the same time, a growth in the pressure lowers the arene yield. At a lower pressure, the arene yield is higher, but coke formation is also higher, hence the catalyst rapidly loses its activity.

The ratio between the volume of the hydrogen-containing gas at 0 °C and 0.1 MPa and the volume of the stock at 20 °C fed into a reactor is called the **feed ratio** (or the **circulation ratio**) of the hydrogen-containing gas. Dilution of the stock vapours with hydrogen favourably affects the duration of operation of the catalyst. The circulation ratio ranges from 1300 to 1800 m^3/m^3. An increase in the circulation ratio is associated with a growth in the operating costs for fuel, water, and electrical energy.

Technological Conditions. The conditions in catalytic reforming plants depend on the plant type (with a fixed-bed or moving-bed catalyst), the type of catalyst, the designation of the plant, and the fractional and hydrocarbon composition of the stock.

The operating conditions of a platforming plant with a fixed-bed catalyst of type АП-64 with a capacity of one million tonnes a year in the production of a component of Grade АИ-95 motor gasoline from the 85-180 °C fraction and an aromatized concentrate of Grade

АИ-86 from the 62-140 °C fraction (for producing benzene, toluene, and xylenes) are given below:

Stock fraction boiling range, °C	85-180	62-140
Temperature, °C:		
hydrofining	350-400	350-400
reforming	480-530	480-530
Pressure in reactor, MPa:		
hydrofining	2.7	2.7
reforming*	3.0	2.5
Volume rate of flow, h^{-1}:		
hydrofining	2.5	2.5
reforming	1.2	1.2
Circulation ratio, m^3/m^3:		
hydrofining	150	130
reforming	1800	1500
Charge ratio for reforming reactors	1:3:7	1:3:7
Hydrogen content in hydrogen-containing gas, % by volume:		
hydrofining	75-55	82-72
reforming	70-60	79-69

* The pressure values are given for the last reactor.

Material Balance. Below are given the material balances (in %) of catalytic reforming plants using the catalysts АП-56, АП-64, and Кр-106:

Catalyst	АП-56	АП-64	Кр-106
Feed			
Stock (85-180 °C or 105-180 °C fraction)	100.0	100.0	100.0
Products			
Hydrocarbon gas	10.0	13.2	7.4
Stabilizer overhead	4.5	4.5	4.5
Catalysate	83.7	76.9	82.3
Hydrogen-containing gas	1.8	5.4	5.8
including hydrogen	(0.9)	(1.0)	(1.3)
Total	100.0	100.0	100.0

The *hydrogen-containing gas* with a hydrogen content of 60-90% is employed in the hydrofining of fuels and lubricating oils. Its composition in per cent by volume in the production of gasoline with an octane number of 95 (I) and of benzene and toluene (II) is approximately as follows:

	I	II
Hydrogen	70.1	83.5
Methane	13.3	9.6
Ethane	9.1	3.6
Propane	4.9	1.4
Butane	1.5	0.8
Pentane and higher	1.1	1.1

The dry gas is directed into the fuel network of the refinery, to a pyrolysis plant, or to a plant producing hydrogen. The stabilizer overhead, which is a mixture of propane, butane, and isobutane, is fractionated for further use as a petrochemical raw material.

7.8. Catalytic Reforming Plants with a Fixed- and Moving-Bed Catalyst

A platforming plant consists of three units: (1) for preliminary hydrofining of the gasoline; (2) for platforming of the hydrofined gasoline (hydrogenate); and (3) for stabilizing the platforming gasoline

If a plant is also used to produce individual arenes, it contains an arene-separating unit, which will be treated in Sec. 7.10.

Flow Diagram. Figure 64 presents a flow diagram of a plant for producing high-octane gasolines using a fixed-bed catalyst.

The feed stock is delivered by pump *21* for mixing with the circulating hydrofined gas and the excess hydrogen of the reforming process. The gas and stock mixture after being heated in exchanger *10* and furnace *12* is fed into hydrofining reactor *11*. Next the mixture of gas and hydrofined gasoline gives up its heat in boiler *22*, exchanger *10*, cooler *8* and is directed into high-pressure hydrofining separator *9* where the gas is separated from the hydrogenate. The hydrogen-containing gas is contaminated with the hydrogen sulphide evolved in hydrofining. The gas from the separator flows into column *2*, where the hydrogen sulphide is scrubbed off with a 15% solution of monoethanolamine.

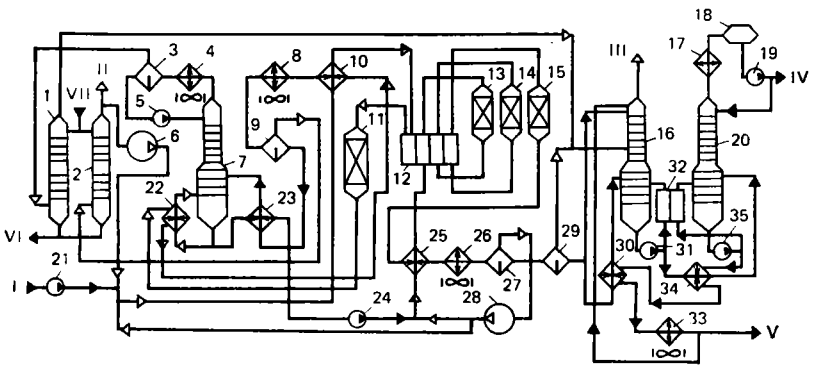

Fig. 64. Flow diagram of a platforming plant with a fixed-bed catalyst: *1, 2, 7, 16, 20*—columns; *3, 9, 27, 29*—separators; *4, 8, 17, 26, 33*—coolers; *5, 19, 21, 24, 31, 35*—pumps; *6, 28*—compressors; *10, 23, 25, 30, 34*—heat exchangers; *11, 13-15*—reactors; *12, 32*—furnaces; *18*—tank; *22*—boiler; *I*—stock; *II*—excess hydrogen; *III*—dry hydrocarbon gas; *IV*—stabilizer overhead; *V*—stable high-octane gasoline; *VI*—15% solution of monoethanolamine saturated with hydrogen sulphide; *VII*—fresh 15% solution of monoethanolamine

The purified gas is divided into two unequal parts. The larger part—the circulation gas of the hydrofining process—is fed to the inlet of circulation compressor *6* and is again mixed with the stock, while the smaller part—the excess hydrogen—is discharged from the plant.

The liquid phase in separator *9* contains hydrofined gasoline with hydrogen sulphide, a hydrocarbon gas, and water dissolved in it. Therefore, the hydrogenate is fed through exchanger *23* into stripping column *7*, where the gas, water, and hydrogen sulphide are stripped from the gasoline at the expense of the heat of the flow from reactor *11* supplied to boiler *22*. The stable hydrogenate from the bottom of column *7* passes through exchanger *23* and is delivered by pump *24* for mixing with the circulating hydrogen of the platforming unit. The gas and gasoline mixture is heated in exchanger *25* and in the second section of furnace *12*, and then flows consecutively through reactor *13*, the third section of furnace *12*, reactor *14*, the fourth section of furnace *12*, and reactor *15*.

The reforming product from reactor *15* is directed into exchanger *25* and cooler *26*, is cooled, and flows into high-pressure platforming separator *27*, where the gas and gasoline are separated. The gas flows to the inlet of compressor *28*. Its major part is returned for mixing with the hydrogenate, while the excess platforming hydrogen is directed into the hydrofining unit.

The liquid product from separator *27* flows into low-pressure separator *29*, where the dissolved hydrocarbon gas is separated from the platformate. The latter is finally stabilized in columns *16* and *20*. The hydrocarbon gas of hydrofining and reforming from separators *3* and *29* is mixed and fed into fractionating absorber *16*.

The unstable gasoline from separator *29* flows in two streams into absorber *16*, namely, a part of the cold gasoline is fed to the top of the absorber, while the other part is heated in exchanger *30* and is fed into the bottom of the absorber. Dry hydrocarbon gas is withdrawn from the top of absorber *16*. Gasoline is withdrawn from its bottom into stabilizer column *20* after preliminary heating in exchanger *34* by the stable gasoline. The stabilizer overhead is discharged from the top of column *20* and from the plant, while the stable gasoline is withdrawn from the bottom of column *20* through exchangers *30* and *34* and cooler *33*. Heat is supplied to the bottom of columns *16* and *20* by the hot stream method through two-chamber furnace *32*. When all the ethane is separated from the gasoline (deethanization conditions), a temperature of 70 °C is maintained at the top of column *20*, and when all the propane is separated (depropanization conditions)—45 °C. In both cases, the temperature at the bottom of the column is 220 °C and the pressure is 11.5 MPa.

At present, plants are also outfitted with driers of the circulating hydrogen-containing gas filled with a zeolite absorber or active

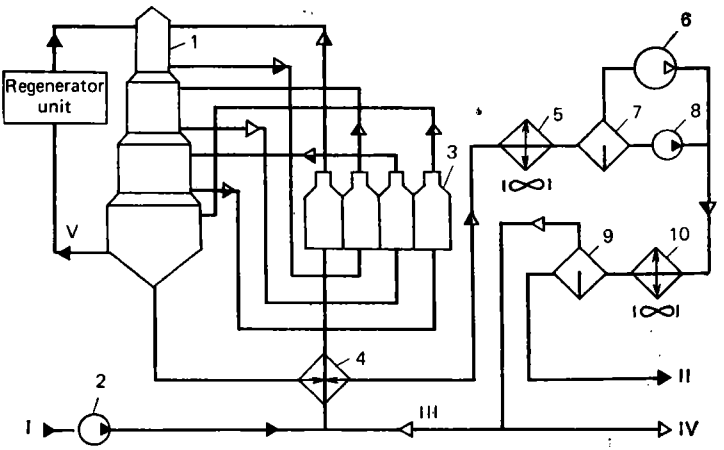

Fig. 65. Diagram of the reactor unit of a reforming plant with a moving catalyst bed:

1—reactor; *2*, *8*—pumps; *3*—furnace; *4*—heat exchanger; *5*, *10*—coolers; *6*—compressor; *7*, *9*—separators; *I*—feed stock; *II*—unstable catalysate; *III*—circulating hydrogen-containing gas; *IV*—hydrogen-containing gas to hydrofining unit; *V*—catalyst to be regenerated

alumina, and also with tanks, measuring devices and a batching pump for feeding in dichloroethane in an amount of 5×10^{-5}% of the stock.

Catalyst Regeneration. When a reaction cycle terminates, the catalyst loses its activity owing to the deposition of coke on it. The regeneration process is performed in stages. First the supply of the stock to the plant is stopped. The hydrofining and stabilizer units are switched off. The circulation of the hydrogen-containing gas in the platforming unit is continued to wash out the hydrocarbons from the system. Next the supply of fuel to the nozzles of the platforming furnace is gradually reduced up to complete shutting off. The system is gradually cooled to 200 °C, and the circulation of the hydrogen-containing gas is stopped. This gas is discharged through reducing valves into the fuel network. The residual hydrocarbon vapours are sucked out of the reactors by a vacuum pump. Next an inert gas is blown through the system and further into the atmosphere. After this, the system is filled with an inert gas up to a pressure of 1 MPa, the circulation compressor is switched on, and the reactor unit is gradually heated with constant circulation of the inert gas. At 250 °C, air is added to the inert gas in an amount such that the volume content of the oxygen in the gas does not exceed 0.5% at the beginning of regeneration and 2% at its end. The coke is burned out in two stages—the first one at 250-300 °C and the second one at 380-400 °C. After the coke has been burned out, the

catalyst is roasted at 500 °C. Next the system is cooled, the circulation of the inert gas is discontinued, and it is discharged into the atmosphere. Then the hydrogen-containing gas is again blown through the system.

A **flow diagram** of a catalytic reforming plant with a moving catalyst bed (the reactor unit) is shown in Fig. 65.

The use of a process with a moving catalyst bed and continuous regeneration of the catalyst keeps the activity of the catalyst at the highest possible level. Here the octane number of the gasoline is 100, while the arene content in the stable catalysate is 75%. The catalysate yield reaches 80-81%. The temperature at the reactor inlet is 544 °C, and the hydrogen-containing gas-to-stock ratio is 940 m^3/m^3 at 0 °C and 0.1 MPa. The molar ratio of the hydrogen and stock is 5.5:1. The pressure in the last reactor section is 0.88 MPa, and the resistance of the reactor is 0.5 MPa. The space velocity is 1.9 h^{-1}. The distribution of the catalyst between the reactor sections is 1:1.5:2.5:5.0.

The bimetal bead catalyst contains 0.6% of platinum and other metals and is promoted by chlorine. The temperature drop in the four reactor sections is 83, 37, 24, and 16 K, respectively. The part of the catalyst directed for regeneration, drying, and restoration is about 0.4-0.5%. The reactor is a cylindrical apparatus about 45 m high with a varying cross section. The section diameters are 1.3, 2.4, 2.5, and 3 m, respectively.

Starting. If the refinery has a reforming plant producing an excess amount of a hydrogen-containing gas, when starting the platforming plant the hydrofining and platforming system is first filled with hydrogen up to the maximum possible pressure (1.2-4 MPa). The circulation compressor is switched on, and cold gas circulation begins. Next the furnace nozzles are ignited, and the temperature is gradually raised to transfer the plant to hot gas circulation. Simultaneously, the hydrogenate stabilizer section is heated. Then the supply of the stock to the plant is started, and small amounts of the stock are begun to be fed into the reactors. These amounts are gradually increased up to a normal feed rate. In the absence of hydrogen, a plant can be started using a mixture of the stock and an inert gas at a capacity forming 25% of the nominal value.

Process Control and Regulation. Stable operating conditions of the plant are maintained by automatic regulators and are controlled by the relevant instruments. The rate of flow of the stock to the plant and the amount of circulating hydrogen-containing gas are kept constant. The supply of fuel to the reactor furnaces is regulated in accordance with the supply of the stock being heated into the furnace and is corrected in accordance with the temperature of the stock at the outlet from the furnace into the reactor. The pressure in the hydrofining unit is automatically kept constant by regulation of the rate

of flow of the hydrogen-containing gas from the plant, while the pressure in the platforming unit is kept constant by regulating the rate of flow of the excess hydrogen to the hydrofining unit. The level in separators *9* and *27* (see Fig. 64) is regulated by withdrawal of the liquid product.

Emergency Blockings. Platforming plants are provided with valuable equipment—circulation compressors, while the reactors are charged with a costly catalyst. A system of automatic blockings is provided to prevent damage to the equipment and catalyst in emergency situations. Should the pressure of the gas drop, its temperature grow at the inlet to the compressor, or should the supply of water for cooling the compressors be stopped, the compressor and stock pump are automatically switched off, and simultaneously the supply of fuel to the furnace is discontinued. When the temperature of the gas and stock mixture at the reactor inlet is excessive, the stock pump is automatically switched off, and the plant is transferred to hot circulation of the hydrogen-containing gas.

Economical Indices. When processing the 85-180 °C fraction, 86.4 MJ of electrical energy, 570 MJ of steam, 95.8 kg of fuel, and 15.4 m^3 of circulation water are consumed per tonne of stable catalysate.

7.9. Equipment of Catalytic Reforming Plants

The reactor unit equipment of platforming plants is the most complicated in its design. It includes the reactors, furnaces, heat exchangers, boilers, and coolers. All this equipment operates under conditions of a high pressure in a hydrogen medium, and most of the apparatus at a high temperature. The capacity of a plant is 200-1000 thousand tonnes a year.

A *reactor* is a cylindrical steel apparatus. The top part has a pipe connection for feeding in the gas and stock mixture. Reactors with either axial or radial inlet of the gas and stock mixture are employed. In the first case, the gas and stock mixture passes downward through the catalyst (Fig. 66). The inlet pipe connection is provided with a device for the uniform distribution of the flow over the entire cross section of the apparatus. In the second case, a perforated pipe with a plugged end passes down the centre of the apparatus from the pipe connection. The stream of gas and stock moves through the catalyst from the walls of the apparatus toward its centre along radii (Fig. 67).

Reactors with a radial inlet have a considerably lower hydraulic resistance than those with an axial inlet. Generally, a reactor with an axial inlet is installed first in the direction of stock flow so as to retain corrosion products in the upper catalyst layer. The remaining reactors have a radial inlet to reduce the overall hydraulic resistance of the reactor unit system. Hydrogen at 525 °C and 2-4 MPa causes

hydrogen corrosion of steel, therefore the steel reactor wall is protected inside by a gunite lining. In addition, a steel perforated sleeve is installed in a reactor, and a gas layer is provided between its wall and that of the apparatus. Disruption of the lining causes overheating and destruction of the reactor wall. The temperature of the outer surface of the steel must be constantly controlled with the aid of external thermocouples (it should be not over 150 °C). The housing

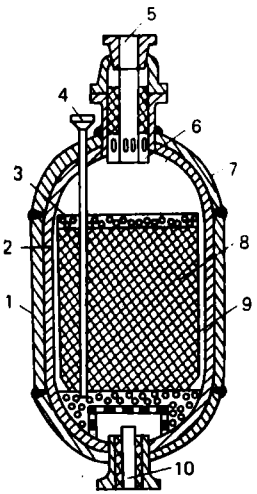

Fig. 66. Reforming reactor with axial inlet of the gas and stock mixture:
1—housing; *2*—lining; *3*—porcelain beads; *4*—pipe connection for thermocouple; *5*—pipe connection for feeding in gas and stock mixture; *6*—distributor; *7*—end plate; *8*—catalyst; *9*—perforated sleeve with screen; *10*—pipe connection for withdrawing gas and product mixture

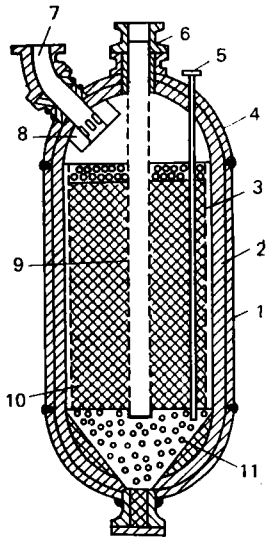

Fig. 67. Reforming reactor with radial inlet of the gas and stock mixture:
1—reactor housing; *2*—lining; *3*—perforated sleeve with screen; *4*—end plate; *5*—pipe connection for thermocouple; *6*—pipe connection withdrawing gas and product mixture; *7*—pipe connection for introducing gas and stock mixture; *8*—distributor; *9*—perforated pipe with screen; *10*—catalyst; *11*—porcelain beads

and end plates of a reactor are made from Grade 09Г2ДТ steel with special hardening of the surface or from Grade 12ХМ steel.

The catalyst is placed in the steel reactor sleeve in a continuous bed. Porcelain beads 16 and 20 mm in diameter are located above and under the catalyst bed to prevent carrying off of the catalyst. The bottom layer of porcelain beads is on a grate additionally covered with a metallic screen. The beads, grate, and screen protect the outlet pipe connection of a reactor from the catalyst getting into it together with the products. The internal components of a reactor are made from alloyed chromium-nickel steel. A six-zone thermocouple is introduced into a reactor from above to control the temperature in it. The

diameter of a reactor is 2200-3000 mm and its height is 9500-11 500 mm.

In plants being designed or erected, the housing and end plates of a reactor are made from dual steel of Grades 12XM + OX18H10T and require no protective lining.

A *furnace* for reforming on a platinum catalyst is of the vertical multiple-chamber multiple-flow type. It is featured by a coil of Grade X5MY heat-resistant steel 100-200 mm in diameter. The coil is all-welded to prevent hydrogen losses. Rifled pipes that sharply increase the coefficient of heat transfer from the flue gases to the stock are installed in the convection sections of the furnaces.

The *heat exchangers* employed in a reactor unit are of the shell-and-tube type, but with a number of distinctions. First, the hot flow from the reactor, which is the most active as regards the corrosive effect, is directed not into the intertubular space, as usual, but into the tube space. Second, these exchangers, to increase their thermal head, are designed following the principle of strict counterflow—the apparatus have one pass along the tubes and one along the intertubular space. This involves certain difficulties of design because it is necessary to compensate the thermal expansion of the tubes relative to the housing. At present, three types of these apparatus are in use, namely, (1) with a gland packing, (2) with an internal tube, and (3) with a bellows-type expansion piece.

A shortcoming of exchangers with a gland packing is that the unreformed stock may get into the reforming products. In exchangers with an internal tube, the heat-exchange surface is utilized insufficiently. An apparatus of the third type is deprived of these shortcomings. In high-capacity plants where the number of consecutively connected heat exchangers exceeds four and, consequently, the thermal head is close to the maximum one, shell-and-tube exchangers with a floating head are used. The housing of an apparatus is made from dual steel of Grades 12XM + 3И496, while the tube bundle is made from Grade X5M steel. The heat-exchange surface area of one apparatus is 350-900 m^2. The total heat-exchange surface area of the reactor unit for a large plant can be 1000-3000 m^2. The heat-transfer coefficient is about 230-400 $W/(m^2 \cdot K)$.

The *coolers* of the reactor unit can be either water or air ones. The former are conventional shell-and-tube apparatus with two passes in the tube space and one in the intertubular space. The water is fed into the tubes, and the stock into the intertubular space. The air coolers are similar to those used in an atmospheric and vacuum distillation plant, but the tubes are made from alloy steel and are designed for a pressure of 5 MPa. The finning ratio is 22.

The most intricate equipment of a reactor unit includes the *stock pump* and the *circulation compressor*. The stock is delivered by a centrifugal eight-stage pump driven by an electric motor. The

pump develops a pressure in the delivery pipeline of 5-6 MPa and has an end packing.

Piston and centrifugal compressors are used for circulation of the hydrogen-containing gas. Model 2M16M-20/42-60, 4M16M-45/35-55 and 4M16-56/15-30 opposed-piston compressors provide a pressure drop between the inlet and delivery pipelines of 1.5-2.0 MPa and a delivery up to 22.2 m^3/s at 0 °C and 0.1 MPa. Centrifugal compressors can be driven either by an electric motor or a steam turbine. A centrifugal turbocompressor has the advantage that its delivery is easily controlled by changing its speed. A turbocompressor for plants with a capacity of one million tonnes a year has a nominal pressure drop of 1.2-1.5 MPa, a delivery of 88.8 m^3/s at 0 °C and 0.1 MPa, and a power of 6900 kW.

7.10. Separation of Arenes from Catalytic Reforming Products

The product obtained as a result of the catalytic reforming of straight-run gasoline contains from 30 to 70% of arenes, the remainder being cycloalkanes, alkanes, and isoalkanes.

Arenes cannot be obtained from this mixture by conventional rectification because they form azeotropic mixtures with alkanes and cycloalkanes. At present, arenes are separated by extraction.

The stock for an arene extraction plant consists of the catalysates after reforming the 62-85 °C fraction (28.5% of arenes), 62-105 °C fraction (37% of arenes), and the 105-140 °C fraction (45.5% of arenes). Polyethyleneglycol, sulpholane, dimethylsulphoxide, and N-methylpyrrolidone are used as the solvents.

An aqueous solution of diethyleneglycol (DEG) became the most popular extractant at Soviet plants for producing arenes from the catalysate of platforming, but at present it is being replaced everywhere with the more efficient tri- and tetraethyleneglycols (TEG and tetraEG).

The basic properties of aqueous polyethyleneglycols are as follows:

	DEG	TEG	TetraEG
Content of water in solvent, %	7	5	5
Specific gravity, d_4^{20}	1.11	1.11	1.11
Boiling point, °C	135	137.2	143
Solvent:stock mass ratio:			
62-105 °C fraction	11:1	7:1	5:1
105-140 °C fraction	16:1	11:1	8:1

Owing to the very close extraction and regeneration conditions, the transition from DEG to TEG or tetraEG does not require any appreciable reconstruction, whereas the capacity of the plant grows by at least 30%.

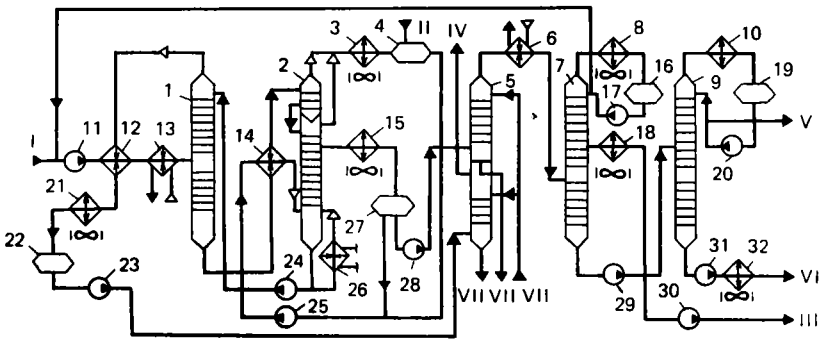

Fig. 68. Flow diagram of plant for extracting arenes from the 62-105 °C fraction catalysate by diethyleneglycol:

1, 2, 5, 7, 9—columns; *3, 6, 8, 10, 15, 18, 21, 32*—coolers; *4, 16, 19, 22, 27*—tanks; *11, 17, 20, 23-25, 28-31*—pumps; *12, 14*—heat exchangers; *13*—steam heater; *26*—boiler; *I*—feed stock; *II*—DEG; *III*—benzene; *IV*—raffinate; *V*—toluene; *VI*—xylene fraction; *VII*—water

Extraction yields the following products: benzene, toluene, xylenes, ethylbenzene, higher arenes, and dearomatized gasoline (raffinate) containing 95% of alkanes (its octane number by the motor method is 45). The raffinate is partly used to produce solvents. It is good to use the raffinate as the stock for selective hydrocracking to produce hydrocarbon gases and a motor gasoline component with an octane number of 75.

The higher arenes can be used as motor gasoline components or directed for the extraction of pseudocumene.

The xylene fraction of reforming gasolines has an approximately constant composition:

Product	Ethylbenzene	*p*-Xylene	*m*-Xylene	*o*-Xylene
Content, %	21.2	18.3	40.4	20.1
Boiling point, °C	136.2	138.4	139.1	144.4
Melting point, °C	−95.0	+13.3	−47.9	−25.2

The isomers have to be separated for further use. Generally the *o*-xylene is separated by the accurate rectification method, and the *p*-xylene by the low-temperature crystallization method.

The obtained arenes are used to produce medicaments, dyes, synthetic detergents, fibres, rubbers, insecticides, additives, plastics, and many other products.

Flow Diagram. Figure 68 presents a flow diagram of a plant for extracting arenes from the 62-105 °C fraction catalysate by diethyleneglycol.

The main apparatus in the plant is an extraction column provided with perforated plates.

The stock is fed by pump *11* into the middle of extraction column *1*, and a 93% solution of DEG is fed into top part of this column.

The raffinate solution is withdrawn from the top of column *1*, is cooled in exchanger *12*, air cooler *21*, and flows to the raffinate section of column *5* for scrubbing with water to remove the DEG. From this section, it flows under its own pressure out of the plant. The solution of arenes in diethyleneglycol is directed from the bottom of column *1* into column *2* for regeneration of the DEG by steam. The bottom of column *2* is supplied with the steam formed in exchanger *14*. The steam from the top of column *2* condenses in air cooler *3*, and the condensate is returned by pump *25* to column *2*. The regenerated DEG from column *2* is fed for extraction into column *1*, while the aromatic product is fed through cooler *15* for scrubbing by water to remove the DEG into column *5*. The aromatized product from the top of column *5* flows into columns *7* and *9* for rectification to produce benzene, toluene, and the xylene fraction.

Technological Conditions of Process. These conditions are as follows:

Temperature, °C:	
at inlet of stock to column *1*	150
at inlet of DEG to column *1*	150
at inlet of extract to column *2*	125
at top of column *2*	85
at bottom of column *2*	150
Pressure, MPa:	
in column *1*	0.8-0.9
in column *2*	0.12-0.15
Rate of flow of steam, kg/kg of extraction stock	0.35-0.5
Consumption of water for scrubbing, %:	
raffinate	5
extract	5
Tolerated rate of flow of dispersed phase through unit cross section of extraction column, $m^3/(m^2 \cdot h)$	40-50

Material Balance. The material balance of an extraction plant (in per cent of reforming catalysate) is as follows:

	62-105 °C fraction	62-85 °C fraction
Feed		
Stock	100.0	100.0
Products		
Benzene	10.9	26.2
Toluene	16.5	3.5
Xylenes and ethylbenzene	4.5	—
Raffinate	66.6	68.5
Losses	1.5	1.8
Total	100.0	100.0

The arenes are not extracted completely from the stock, being lost with the cycloalkane-methane fraction.

A Combined Plant for Arene Production. The increased demand for polymer materials requires a greater volume of production of individual arenes. To accelerate arene production, the Ufa refinery has erected a combined plant

for the production of arenes. It consists of a number of basic and auxiliary production facilities aimed at boosting the yield of arenes in the highest demand—benzene, *o*- and *p*-xylenes. The main sections of the plant are as follows:

Section 100—accurate rectification of straight-run gasoline to separate the 85-140 °C fraction.

Section 200—hydrofining of the 85-140 °C fraction to a residual sulphur content of 0.0001%. The pressure of the process is 4 MPa, the temperature is 400 °C, the hydrogen-containing gas-stock ratio is 70 m^3/m^3, and the space velocity is 8 h^{-1}.

Section 300—catalytic reforming of the 85-140 °C fraction on a spherical catalyst with its continuous regeneration. The pressure of the process is 1.15 MPa, its temperature is 543 °C, the catalyst circulation is 513 kg/h, and the hydrogen-containing gas-stock ratio is 850 m^3/m^3. The distribution of the catalyst between the reactors is 1:1.5:2.5:5.

Section 400—extraction of benzene and toluene by sulpholane. The solvent-stock ratio is 3:1, the temperature is 80-90 °C, and the pressure is 0.3-0.5 MPa.

Section 500—thermohydroalkylation of the toluene with the production of benzene with a purity of 85-90%:

$$C_7H_8 + H_2 \rightarrow C_6H_6 + CH_4$$

Butylthiol is employed as the reaction initiator. The temperature of the process is 666-755 °C, the pressure is 3 MPa, and the degree of conversion of the stock is 93%.

Section 600—the production of benzene and xylenes from toluene by a transalkylation reaction:

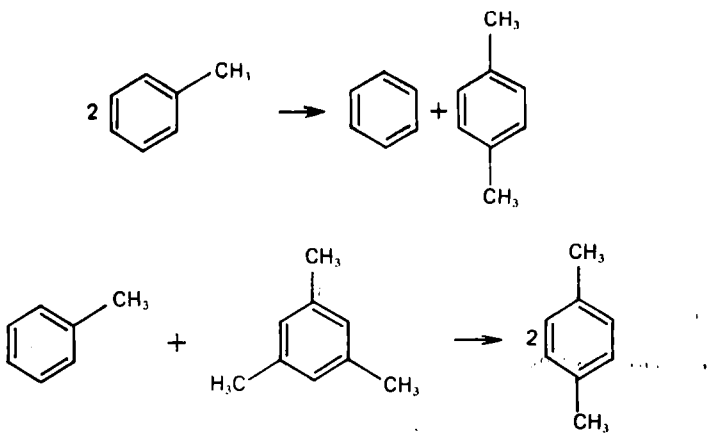

The process is conducted in a medium of circulating hydrogen on a platinum catalyst. The degree of conversion is 76%, the temperature is 500 °C, and the pressure is 3 MPa.

Section 700—the separation of *p*-xylene from its mixture with all other xylenes (except for *o*-xylene) by adsorption on zeolites with switching over of the streams by a special device—a rotor valve. A mixture of *p*-diethylbenzene and normal alkanes with 11 to 13 carbon atoms is used as the desorbent. This process is known as the "Parex" one. The adsorption temperature is 170 °C and the pressure is 2 MPa.

Section 800—isomerization of a mixture of ethylbenzene and *m*-xylene on a platinum catalyst in a medium of a circulating hydrogen-containing gas with the production of *o*- and *p*-xylenes:

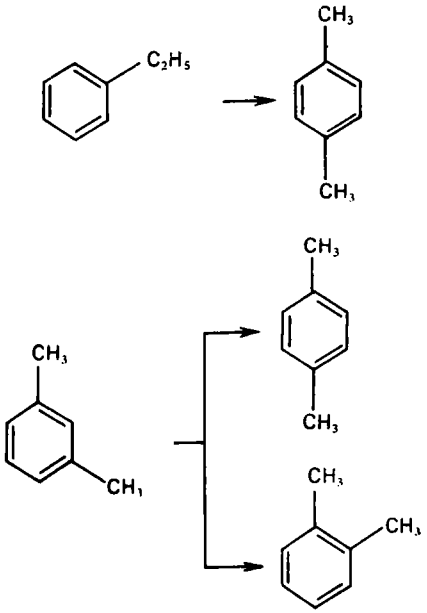

The temperature of the process is 400-445 °C, the pressure is 1.4-2.4 MPa.

Section 900—the fractionation of arenes. The flow diagrams of sections 100, 200, 300, and 400 are similar to those of the processes treated in the relevant sections of the book.

The capacity of the individual sections relative to the stock (in million tonnes a year) is as follows:

Section	100	200	300	400	500	600	700	800
Capacity	2.4	1.0	1.0	0.44	0.12	0.33	0.95	0.77

Material Balance. The overall material balance of a combined plant (in tonnes a year) is as follows:

Secondary Distillation of Gasoline

Feed	
Gasoline	2 071 440
Products	
Fractions:	
IBP-62 °C	414 240
62-85 °C	331 440
140-170 °C	391 520
170-180 °C	43 520
85-140 °C	890 720
Total	2 071 440

Including Catalytic Reforming and Production of Arenes

Feed	
Fraction 85-140 °C	890 720
Products	
Unstable reflux	52 880
Gas with high H_2 content	17 440
Raffinate	205 760
Benzene	125 160
o-Xylene	165 040
C_9 and higher arenes	9 680
p-Xylene	165 040
Fuel gas	140 720
Losses	9 000
Total	890 720

The yield of target arenes produced in the individual sections is distributed as follows:

Section	300	500	600	800	Total
Yield of benzene, %	16	52	32	—	100
Yield of *p*-xylene, %	35	—	15	50	100
Yield of *o*-xylene, %	55	—	15	30	100

7.11. Catalysts and Mechanism of Hydrogenation Processes

The processing of petroleum feed stock in a hydrogen medium is called **hydrogenation**. These processes occur in the presence of hydrogenating catalysts at high values of the temperature and pressure.

The attachment of hydrogen to the products of hydrogenation reactions makes it possible to produce both lighter hydrocarbons in comparison with the stock and products superior in quality to the feed stock. As a whole, hydrogenation processes extend the processing of petroleum and yield products containing no sulphur. In other words, they are of major assistance in solving problems associated with the prevention of contamination of the environment.

Hydrogenation processes are to a certain extent conditionally divided into hydrofining and hydrocracking ones.

In **hydrofining**, the organic compounds with heteroatoms contained in the stock are decomposed, and the decomposition products become saturated with hydrogen. This is attended by the evolution of hydrogen sulphide, ammonia, water, and metals.

Examples of reactions proceeding in hydrofining are:

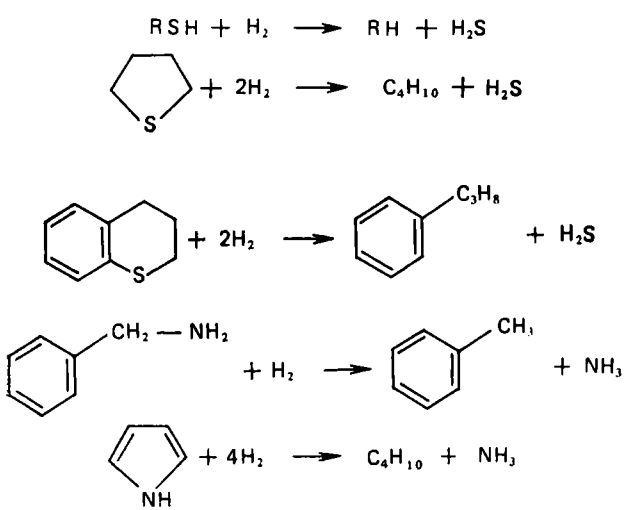

Moreover, hydrofining is attended to a small extent by decomposition of the hydrocarbons with the subsequent hydrogenation of the fragments and unsaturated hydrocarbons, and with decomposition of the coke on the catalyst.

Hydrofining Catalysts. In distillate hydrofining processes, fixed-bed tabletted catalysts are employed. They include alumino-cobalt-molybdenum (AKM), alumino-nickel-molybdenum (AHM), and alumino-nickel-molybdenum-silicon (AHMC) catalysts. These catalysts have a high mechanical strength, a stability to poisons, and retain their activity for a long time. For example, in the hydrofining of straight-run gasolines, kerosenes, and diesel fuels, the catalysts can function without any loss of activity during 18-30 months.

During operation, coke (7-20% of the catalyst mass) and sulphur (0.5-1.5% of the catalyst mass) are deposited on the catalyst, and its activity drops. The activity can be restored by burning out the coke and sulphur with a steam- or gas-air mixture. Generally hydrofining catalysts withstand at least three regenerations and are replaced after 30-50 months of service.

The following transformations occur in **hydrocracking:**

(1) decomposition of the high-molecular compounds and hydrogenation of the unsaturated decomposition products;

(2) dealkylation of cyclic hydrocarbons;

(3) isomerization of alkanes and cycloalkanes;

(4) hydrogenation of aromatic rings;

(5) hydrogenation of sulphur-, oxygen-, and nitrogen-containing compounds.

Let us consider briefly the transformations of individual components of the stock under the conditions of hydrogenation processes.

Alkanes. Alkanes are characterized by decomposition at C—C bonds with the simultaneous saturation of the fragments and hydroisomerization:

$$RCH_2CH_2R + H_2 \rightarrow 2RCH_3$$

$$n\text{-}C_nH_{2n+2} \rightarrow iso\text{-}C_nH_{2n+2}$$

The rate of hydrocracking of alkanes only slightly exceeds that of their purely thermal decomposition. The isomerization of alkanes is caused by the active effect of the catalysts. Branched fragments are more readily saturated by hydrogen than unbranched ones. This is just what leads to the accumulation of isoalkanes in the products. The deep decomposition of alkanes is not desired because this is attended by a high yield of gases, chiefly methane.

Unsaturated Hydrocarbons. In the decomposition of alkanes and the dealkylation of cyclic hydrocarbons, alkenes with a various structure form initially.

In the processing of secondary stock, alkenes and other unsaturated compounds are present in the stock from the beginning. From the thermodynamic viewpoint, alkenes can be hydrogenated, polymerized, or form rings. But the rate of hydrogenation is higher, therefore polymerization, ring formation, and other secondary transformations of alkenes do not generally occur. The hydrogenation reaction is reversible:

$$C_nH_{2n}+H_2 \rightleftharpoons C_nH_{2n+2}+Q$$

The heat of hydrogenation of one mole of an alkene can be evaluated from data on the bond energy. In the reaction, two C—H bonds and one C—C bond form (heat is evolved), and one H—H bond and one C=C bond are broken (heat is absorbed). Summing yields:

$$Q_{hydr}=2\times 392+298-436-610=36 \text{ kJ/mol}$$

The hydrogenation reaction is exothermic.

At temperatures above 400 °C, the thermodynamic probability of the reaction of saturating alkenes with hydrogen greatly drops. But this is compensated by an increase in the hydrogen pressure. The bimolecular hydrogenation reaction is attended by a reduction in volume. Hence, an increase in the hydrogen pressure is favourable both from the thermodynamic and kinetic viewpoints.

For high-molecular hydrocarbons at high temperatures, in addition to hydrogenation, further decomposition at C—C bonds is possible, and the newly formed unsaturated fragments will also be saturated with hydrogen. Such a type of reaction should be called destructive hydrogenation.

The rate of saturation with hydrogen also depends on the structure and molecular mass of the alkenes.

The completeness of hydrogenation can be seen to depend on a large number of factors: the properties of the catalyst, temperature, pressure, composition of the reaction mixture, and the duration of the reaction.

The predomination of the alkene hydrogenation reaction over condensation reactions allows hydrocracking to be conducted without any substantial deposition of coke on the apparatus and catalyst and without the formation of heavy residues. This is one of the main advantages of hydrocracking.

Cycloalkanes. In hydrocracking, cycloalkanes are characterized by processes of decomposition, decyclization, dealkylation, ring isomerization, and the hydrogenolysis of monocyclic hydrocarbons.

The decomposition of di- and polycycloalkanes is envisaged as consecutive decyclization and dealkylation with the simultaneous saturation of the unsaturated fragments with hydrogen. The result is the accumulation of cyclopentane, cyclohexane, and saturated

hydrocarbons. For example, the following scheme of hydrocracking can be envisaged for perhydroacenaphthene:

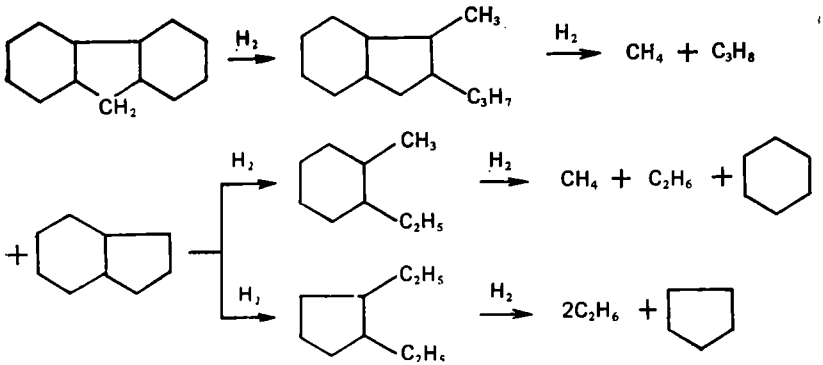

The reaction of ring isomerization in the presence of hydrocracking catalysts proceeds similarly to the way described in Sec. 7.2.

By **hydrogenolysis** of hydrocarbons of the cyclopentane series is meant a decyclization reaction with the formation of alkanes. The cyclopentane ring is mainly broken at the second position bond relative to the ring carbon having a side chain. For example, for methylcyclopentane at 300 °C over a platinum catalyst in the presence of hydrogen, the reaction proceeds as follows:

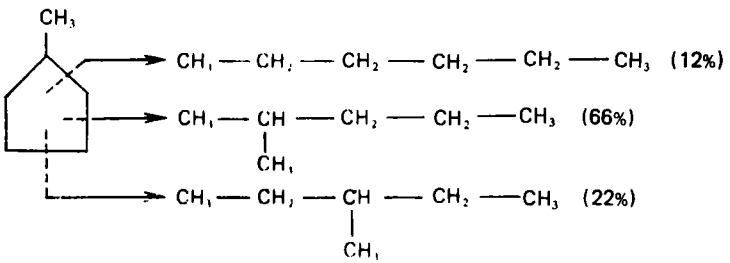

In addition to the above transformations, a substantial dehydrogenation of cyclohexanes to arenes occurs over an alumino-cobalt-molybdenum catalyst, in contrast to a platinum one.

Arenes. Hydrocarbons containing aromatic rings are characterized by reactions of dealkylation and hydrogenation of the benzene ring. The formed cycloalkanes enter into the reactions described above. For hybrid molecules like tetralin, conversely, benzene may accumulate owing to the opening of the cycloalkane ring and further hydrodealkylation. The condensation of polycyclic systems under the pressure of hydrogen is completely inhibited. The reaction of

hydrogenation of the benzene ring at temperatures above 300 °C is characterized by a positive value of ΔG. Consequently, to shift equilibrium in the direction of formation of saturated rings, an increased hydrogen pressure is required. It is just these conditions that are characteristic of hydrocracking.

The hydrogenation of polycyclic arenes proceeds stepwise. First the extreme rings are hydrogenated, and then the central ones. The formed mixed cycloalkane-arene systems can be decyclized with breaking of the cyclohexane rings or isomerized with the transformation of a cyclohexane ring into a cyclopentane one. Thus, the hydrocracking of arenes is very involved. As a result of the process, when its extent is sufficient, alkanes and cycloalkanes accumulate. The hydrogenation of benzene and its homologues is naturally not desirable if the process is aimed at producing motor fuel because the octane number of the gasoline lowers in this case.

The individual kinds of hydrocarbons of heavy petroleum stock can be arranged in the following series as regards the decrease in their tendency to transform under hydrocracking conditions:

condensed polycyclic aromatic structures with three and more rings;

tetracyclic cycloalkanes, dialkylbenzenes, naphthalenes, and other arenes with one to three rings;

alkanes, cycloalkanes with one to three rings, alkylbenzenes.

We thus see that unlike catalytic cracking, in hydrocracking the most aromatized polycyclic structures transform most readily and completely. It should be noted, however, that when the temperature is raised to 450 °C and higher, the rates of the reactions of all the hydrocarbon groups become closer to one another.

Hydrocracking Catalysts. The most popular catalysts of hydrogenation processes are the oxides and sulphides of metals such as nickel, cobalt, molybdenum, and tungsten on acidic carriers such as aluminosilicate and alumina. All these catalysts must be stable with respect to catalyst poisons and especially to sulphur-containing compounds.

Catalysts for hydrocracking must simultaneously have decomposing, isomerizing, and hydrogenating properties. This is why they generally contain platinum, cobalt or nickel, tungsten or molybdenum as the hydrogenating component, and aluminosilicate to ensure the decomposition and isomerization of the stock.

As in the catalytic cracking process, lately crystalline forms of aluminosilicates (synthetic zeolites) have come into use in hydrocracking as the acidic component.

Hydrocracking depending on the properties of the stock and the designation of the process is conducted in two or one stage. For heavier kinds of stock, two stages are the rule.

In the first stage, a certain lowering of the molecular mass of the

stock is achieved, it is saturated with hydrogen, and the sulphur, oxygen, and nitrogen are completely or partly removed in the form of hydrogen sulphide, water, and ammonia. Sulphurated tungsten and nickel oxides are the best catalysts of the first stage. A sulphur-resistant alumino-cobalt-molybdenum catalyst can also be employed. In the second stage, the stock prepared in the first stage of the process is subjected to deep cracking under the pressure of hydrogen on fixed-bed catalysts with a long service life.

7.12. Hydrofining of Distillates

Catalytic hydrofining is employed for improving the quality and increasing the stability of petroleum products by removing sulphur-, nitrogen-, oxygen-, and organometal-containing compounds, and also for saturating unsaturated and aromatic hydrocarbons.

Hydrofining is a must for almost all petroleum fuels, both straight-run and of a secondary origin, namely, gasoline, kerosene, jet and diesel fuel, and vacuum gas oil. The hydrofining process is also employed for improving the components of lubricating oils and paraffin waxes.

The residual content of sulphur in the target products is negligible; for example, the gasolines directed for reforming contain from 1.2×10^{-4} to 2×10^{-6}%, hydrofined jet fuel contains 0.002-0.005%, and diesel fuel contains 0.02-0.06% of sulphur.

Gas, distillate, and hydrogen sulphide are also hydrofining products. The gas containing hydrogen, methane, ethane, and an insignificant amount of propane and butane is used as fuel directly at the refinery. The distillate formed in the hydrofining of kerosene, diesel fuel, and heavier stock and consisting of a gasoline fraction with a low octane number is discharged into the motor gasoline or is added to the platforming stock. The hydrogen sulphide goes to produce sulphur or sulphuric acid.

Process Parameters. The hydrofining parameters are kept within definite limits depending on the quality of the stock being treated and the required degree of purification.

Temperature. The temperature interval from 340 to 420 °C is the optimal one for the hydrofining reactions. Below 340 °C, the desulphuration reactions proceed poorly, while above 420 °C, the reactions of cracking and coke formation gather strength.

When a plant is operating at the beginning of a catalyst run, a lower temperature should be maintained because elevation of the temperature is employed to compensate the drop in catalyst activity.

Pressure. The total pressure in the system varies from 2.5 to 6 MPa, the partial pressure of the hydrogen being 1.5-3.7 MPa. When the stock being refined is heavier and contains more unsaturated hydro-

carbons, the partial pressure of the hydrogen in the hydrogen-containing gas at the reactor inlet should be higher. An increase in this pressure improves the degree of refining, lowers coke formation, and prolongs the service life of the catalyst.

The *hydrogen-containing gas-stock ratio* ranges from 200 to 700 volumes of the gas (at 0 °C and 0.1 MPa) to one volume of stock.

In the hydrofining of distillates with a high content of unsaturated hydrocarbons or resinous substances, for example the diesel fractions

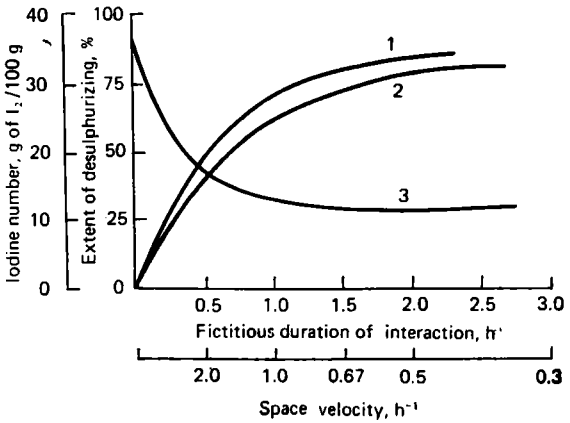

Fig. 69. Extent of desulphuration and iodine number of coking distillate versus the space velocity of feeding in the stock:
1—extent of desulphuration on an alumino-nickel-molybdenum catalyst; *2*—the same on an alumino-cobalt-molybdenum catalyst; *3*—iodine number on both catalysts

of coking or vacuum gas oil, the gas-stock ratio is the highest. An increase of this ratio extends the duration of plant running without regeneration of the catalyst.

The *space velocity* ranges from 1 to 10 h^{-1} and depends both on the quality of the stock and the required degree of purification. In the refining of straight-run gasolines, the space velocity is 5 h^{-1}, and in the refining of vacuum gas oil it is 1 h^{-1}. The extent of decomposition of the sulphur-containing compounds versus the space velocity is shown in Fig. 69. Lowering of the space velocity can be seen to increase the extent of refining.

Hydrogen Consumption. Hydrogen in hydrofining is spent on hydrogenation, dissolving, and discharge. The amount of hydrogen used for hydrogenation depends most on the content of unsaturated hydrocarbons, and also of resins in the stock and ranges from 0.1% for straight-run gasoline to 1.3% for coking gasoline or vacuum gas oil. The hydrogen lost owing to its dissolution in the liquid

reaction products grows with an increase in the molecular mass of the stock being refined and the total pressure in the system.

In the refining of secondary products, the concentration of the hydrogen in the circulating hydrogen-containing gas after the reactor drops to below the tolerated limit because of the high consumption of the hydrogen and its dilution by the reaction gases. To maintain the required hydrogen concentration before the reactor, part of the gas is discharged from the system and is replaced with gas from the reforming process.

Heat Effect of the Reaction. The reaction of hydrogenation of unsaturated, aromatic, and sulphur-containing compounds is attended by the evolution of heat. In the hydrofining of light straight-run fuels—gasoline, kerosene, diesel fuel—the heat effect of the reaction is comparatively low and is 70-80 kJ per kilogramme of stock. In the hydrofining of fuels with a high content of unsaturated hydrocarbons, and also of heavy fuels, the heat effect of the reaction reaches 260-500 kJ/kg.

To remove the surplus heat from the reaction zone, cold circulating gas or a mixture of the cold gas and a cold liquid unstable hydrofining product (hydrogenate) is fed into the reactor between the catalyst layers.

Hydrogen-Containing Gas. The gas used in hydrofining is not pure hydrogen, but contains only 50-95% of it, the remainder being methane, ethane, propane, and butane. As a result of the hydrofining reactions, the hydrogen is absorbed with the formation of hydrocarbon gases, hydrogen sulphide, and water. This is why the hydrogen content in the gas at the inlet to the reactor is higher than at the outlet. The consumption of hydrogen is compensated by feeding hydrogen from reforming plants (70-90% by volume of H_2), from plants producing hydrogen, or from other sources.

Flow Diagram. Figure 70 presents a flow diagram of a diesel fuel hydrofining plant.

The diesel fuel (feed stock) is delivered by stock pump *12* for mixing with the hydrogen-containing gas. The mixture is heated in the intertubular space of heat exchangers *13* of the reactor unit and in furnace *1* up to the reaction temperature, and is then delivered into hydrofining reactors *2* and *3* where the sulphur-, nitrogen- and oxygen-containing compounds decompose, and the unsaturated and partly the aromatic hydrocarbons are hydrogenated.

The mixture of the hydrogen-containing gas and hydrogenation products gives up its heat to the gas and stock mixture while passing through the tube space of heat exchangers *13*, and is cooled in cooler *4*. Next the mixture flows into high-pressure separator *5* where the circulating gas is separated from the liquid hydrofined product. From separator *5*, the hydrogen-containing gas is directed for purification from hydrogen sulphide into absorber column *18*,

where the hydrogen sulphide is absorbed by a monoethanolamine solution. The purified gas flows to the inlet of compressor *14* that returns it to the hydrogen circulating system. The fresh hydrogen-containing gas is mixed with the circulating gas before the compressor. If the hydrogen content in the circulating gas drops sharply as a result of the reaction, part of this gas is discharged after absorber column *18*.

The liquid hydrogenate after separator *5* contains dissolved hydrogen, methane, ethane, propane, and butane. To separate them, the

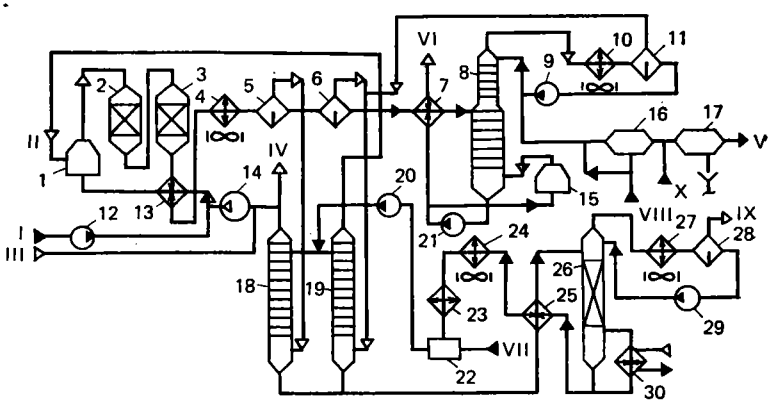

Fig. 70. Flow diagram of diesel fuel hydrofining plant:

1, *15*—furnaces; *2*, *3*—reactors; *4*, *10*, *23*, *24*, *27*—coolers; *5*, *6*, *11*, *28*—separators; *7*, *13*, *25*—heat exchangers; *8*, *18*, *19*, *26*—columns; *9*, *12*, *20*, *21*, *29*—pumps; *14*—compressor; *16*, *17*, *22*—tanks; *30*—boiler; *I*—feed stock; *II*—hydrocarbon gas; *III*—fresh hydrogen from reforming plant; *IV*—hydrogen-containing gas being discharged; *V*—gasoline; *VI*—hydrofined diesel fuel; *VII*—monoethanolamine; *VIII*—10% sodium hydroxide solution; *IX*—hydrogen sulphide; *X*—water

hydrogenate is directed into low-pressure separator *6*, where part of the dissolved gas evolves. For complete stabilization of the hydrogenate, it is fed under its own pressure from separator *6* through exchanger *7* into stabilizer column *8*.

From the top of this column, the gasoline vapours and gas flow into condenser and cooler *10*, whence the condensed gasoline and the gas are directed into separator *11* for separation. The gas from separators *6* and *11* flows into absorber *19* for scrubbing, i.e. removing the hydrogen sulphide by a monoethanolamine solution, after which it is discharged from the plant. The gasoline from separator *11* is also fed by pump *9* for scrubbing off the hydrogen sulphide by a solution of an alkali or blowing a hydrocarbon gas through it, after which it is withdrawn from the plant. The stabilized hydrofined diesel fuel is cooled in exchanger *7* and in a cooler, after which it is also withdrawn from the plant.

The hydrogen sulphide obtained in the hydrofining plant is transferred to a plant for producing sulphur or sulphuric acid.

Technological Conditions of the Process. These conditions are as follows:

Temperature, °C:	
at inlet to reactor	360-380
in separators *5* and *6*	50
at bottom of column *8*	280
Pressure, MPa:	
in reactor	3.6-3.9
in separator *5*	3.0
in separator *6*	0.6
of stabilization	0.2
Space velocity, h^{-1}	2-3

Diagram and Conditions of Regenerating Catalyst by Steam and Air Method. In the steam and air method of catalyst regeneration, only the furnace and reactors remain in operation, and all the other equipment is shut down.

Prior to regeneration, an inert gas must be blown through the system to get rid of the petroleum stock and hydrogen residues. Next steam is passed through the furnace and reactors, with gradual elevation of the temperature. At 420 °C, air is added to the steam. The air content in the steam-air mixture, which initially does not exceed 1% by volume, is gradually increased to 7-8%, and the temperature is also gradually increased from 330 to 400 °C. In the burning zone, the temperature must not exceed 500-550 °C, and the pressure 0.3 MPa. The duration of burning out depends on the rate of flow of the steam and is 70-100 hours.

Material Balance of Diesel Fuel Hydrofining Plant. Below is given the material balance (in %) of the reactor unit in the hydrofining of two kinds of straight-run diesel fuel—the 240-350 °C fraction of Samotlor petroleum with a sulphur content of 0.7% (I) and the same fraction of Arlan petroleum with a sulphur content of 2.4% (II):

	I	II
Feed		
Straight-run diesel fuel	100.0	100.0
Hydrogen-containing gas calculated for pure hydrogen	0.4	0.47
Total	100.4	100.47
Products		
Hydrofined diesel fuel	96.0	95.0
Hydrogen sulphide	0.65	2.10
Hydrocarbon gas	0.75	0.67
Discharged gas	2.0	1.70
Losses	1.0	1.0
Total	100.4	100.47

The equipment of a hydrofining plant, the ways of regulating the technological conditions, and safety engineering at hydrofining plants are similar to those for gasoline fraction platforming plants.

Hydrofining of Secondary Gasolines and Jet Fuels. It is good to subject gasolines of catalytic cracking to moderate selective hydrofining at a pressure of 2 MPa. The octane number drops insignificantly here. The gasolines of thermal cracking and coking under mild conditions of selective hydrofining lower their octane number by 5 to 10 units. These gasolines are therefore subjected to deep hydrofining with complete saturation of the unsaturated hydrocarbons at 5 MPa and a hydrogen consumption of 1.1% of the stock.

It is good practice to subject the hydrogenate of deep hydrofining to catalytic reforming. Complications are introduced into the process of deep hydrofining of secondary gasolines by the high heat effect of the reaction and the rapid deactivation of the catalyst. Overheating and deactivation of the catalyst are prevented by employing a shelf reactor in which a mixture of cold circulating hydrogen-containing gas and reflux (hydrofined gasoline) is introduced between the layers of the catalyst.

Sulphur is removed from jet fuel under mild conditions at 360-380 °C, 2-4 MPa, and a space velocity of 2-5 h^{-1}. If there is a need to hydrogenate arenes for increasing the luminometric number, a higher pressure (7 MPa) is employed, or nickel-tungsten sulphide catalysts with a higher hydrogenating effect are used.

New Catalysts. At present, modified catalysts of the series ГО, ГК-35 have been developed for the hydrofining of distillates. Test runs of diesel fuel hydrofining plants with the use of the catalysts ГО-116 and ГО-117 have shown the possibility of increasing the space velocity from 3.5 to 5-7 h^{-1} without detracting from the degree of desulphuration.

7.13. Hydrocracking of Distillates

The middle of the 1950's saw the onset of the industrial implementation of the hydrocracking process. As shown in Sec. 7.11, in hydrocracking the reactions typical of catalytic cracking are combined with hydrogenation reactions. This progressive process is quite universal both as regards the stock and the products. Both the distillate fractions—heavy straight-run gasolines*, gas oils, similar fractions produced by catalytic cracking and coking, and residues can be subjected to hydrocracking.

* The process is used to produce liquefied gases in countries not having their own natural gas resources. It is also possible to produce light isoalkanes—a stock for the production of a light high-octane component of motor gasolines with a high isoalkane content.

The basic technological parameters of hydrocracking are the temperature, hydrogen pressure, space velocity of stock feed, the hydrogen-containing gas-stock ratio, and the hydrogen content in the circulating gas. Variation of these parameters and the use of various catalysts make it possible to create numerous processes for the most diverse purposes. Some of them are described below.

7.13.1. Single-Stage Hydrocracking of Gas Oils

Straight-run vacuum gas oil and the gas oils of catalytic cracking and coking are subjected to hydrocracking to produce light fuel fractions, namely, gasoline, jet and diesel fuel. The process can be conducted in one or two stages. The single-stage hydrocracking plant Л-16-1 employs an alumino-cobalt-molybdenum catalyst. The flow diagram of the reactor unit does not virtually differ from that for the hydrofining of diesel fuels (see Fig. 70).

Technological Conditions of the Process. These conditions are as follows:

Temperature, °C:	
at inlet to reactor	400-410
in high-pressure separator	50
Pressure in reactor, MPa	5
Space velocity, h^{-1}	1
Hydrogen-stock ratio, m^3/m^3	600
Volume content of hydrogen in circulating gas at inlet to reactor, %	75
Heat of reaction, kJ per kilogramme of stock	130-250

The catalyst is regenerated in the way described in Sec. 7.12.

Material Balance. Below is given the material balance (in %) of a plant for the single-stage hydrocracking of vacuum gas oil of Romashkino petroleum without recirculation of the hydrocracking residue:

Feed	
Stock—vacuum gas oil	100.0
Hydrogen-containing gas	2.09
including pure hydrogen	(0.82)
Total	102.09
Products	
Hydrocarbon gas	2.89
Gasoline	4.61
Diesel fuel	42.83
Hydrocracking residue	47.66
Hydrogen sulphide	2.07
Discharged hydrogen-containing gas	1.02
Losses	1.01
Total	102.09

Equipment. A hydrocracking reactor (Fig. 71) is a cylindrical apparatus with spherical end plates. It has a diameter of 2600 mm and a height of the cylindrical part of 11 000 mm. The wall is made from Grade 12XM steel and has an internal protective gunite lining. The gas and stock mixture is fed in through a pipe connection in the top end plate outfitted with a special distributing device (Fig. 72). The reaction products are discharged through a pipe connection in the bottom end plate outfitted with a special screen for retaining the catalyst.

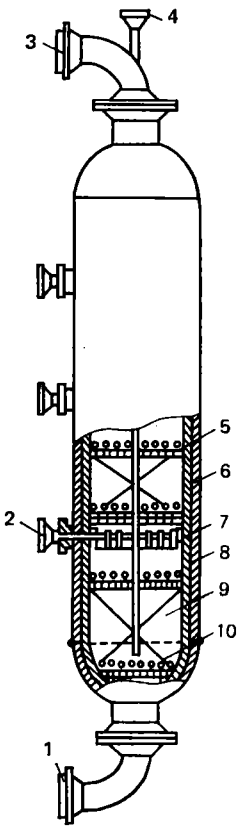

Fig. 71. Hydrocracking reactor:
1—pipe connection for discharging gas and product mixture; *2*—pipe connection for introducing cooling gas; *3*—pipe connection for feeding in gas and stock mixture; *4*—pipe connection for thermocouple; *5*—grid; *6*—housing; *7*—distributing plate; *8*—lining; *9*—catalyst; *10*—porcelain beads

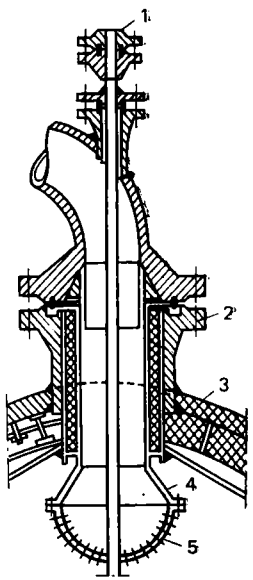

Fig. 72. Distributing device for feeding in the gas and stock mixture:
1—pipe connection for thermocouple; *2*—pipe connection for feeding in gas and stock mixture; *3*—reactor housing; *4*—cone; *5*—perforated hemispherical lid

The high heat effect of the reaction necessitates the introduction of the cooling agent directly into the reactor. For this reason, the catalyst is not placed in a continuous layer, but is arranged on two to four special grids with spaces between the separate layers. The

cooling agent is introduced under the grids through special distributing devices.

The plant Л-16-1 is also employed for the hydrofining of vacuum gas oils both for improving the stock of catalytic cracking and for obtaining sweet furnace fuels. In the hydrofining of the vacuum gas oil produced from Arlan petroleum (the 300-480 °C fraction) with a sulphur content of 2.83%, about 90% of the sulphur is removed at a partial hydrogen pressure of 3.2-3.6 MPa, a temperature of 380-390 °C, and a space velocity of 1 h^{-1}. The fractional composition of the vacuum gas oil becomes lighter (the amount of fractions boiling up to 350 °C grows by 10-20%), i.e. hydrocracking reactions occur and the hydrocarbon composition changes because of hydrogenation of the polycyclic arenes and resins.

7.13.2. Two-Stage Hydrocracking of Gas Oils

When the heavy gas oils of the destructive processing of petroleum (delayed coking, catalytic cracking) or straight-run vacuum gas oil with a relatively high content of sulphur, nitrogen, and polycyclic arenes are used as the hydrocracking feed stock, the catalyst in single-stage operation is rapidly poisoned and loses its activity. This is why it is necessary to preliminarily prepare the stock, i.e. conduct the process in two stages. An alumino-cobalt-molybdenum catalyst resistant to nitrogen and sulphur is employed in the first stage, while more active decomposing and isomerizing catalysts are employed in the second one.

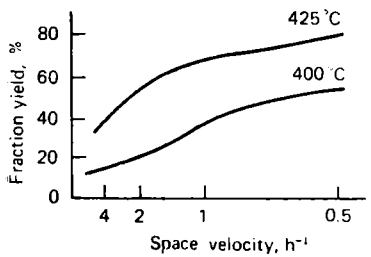

Fig. 73. Yield of IBP-195 °C fraction (in % of hydrogenate) versus the space velocity of feeding in the stock at 400 and 425 °C

The second stage is featured by the possibility of controlling the selectivity of hydrocracking (the production mainly of gasoline, jet or diesel fuel) by changing the temperature and space velocity of feeding in the stock. Examination of Fig. 73 reveals that when the space velocity is reduced from 4 to 0.5 h^{-1} at 400 °C, the gasoline yield increases from 14 to 54%, while when the temperature is raised (at a space velocity of 1 h^{-1}) from 400 to 425 °C, the gasoline yield increases from 33 to 62%.

Table 10 presents the properties of the feed stock and products for the gasoline variant of two-stage hydrocracking of vacuum gas oil.

Table 10. **Properties of Stock and Products of Two-Stage Hydrocracking of Vacuum Gas Oil (Gasoline Variant)**

Index	Stock (350-500 °C fraction)	Gasoline (IBP-195 °C fraction)	Diesel fuel (195-345 °C fraction)	Residue (345-400 °C fraction)
Specific gravity, d_4^{20}	0.920	0.720	0.830	0.900
Molecular mass	330	120	210	—
Iodine number	12	1	2	—
Content, %:				
sulphur	2.1	0.01	0.02	0.04
nitrogen	0.1	None	Traces	Traces
Pour point, °C	30	—	−10	35
Octane number by motor method (without TEL)	—	73-76	—	—
Cetane number	—	—	50-55	—

The wide gasoline fraction meets all the requirements to motor gasoline of Grades A-72 and A-76 and has a high lead response. The diesel fuel meets all the requirements to summer diesel fuel. When the second stage operates with the predominating production of diesel fuel, the gasoline has an octane number of 68-70 by the motor method. The hydrocracking residue can be successfully used as a catalytic cracking stock or recycled to the process.

Flow Diagram (Fig. 74). The stock is fed by pump *11* for mixing with the circulating hydrogen-containing gas delivered by compressor *16* and fresh hydrogen flowing in from the delivery pipeline. The mixture is heated consecutively in exchanger *3* and furnace *1* and flows into reactor *2* through the top pipe connection. From the bottom connection of the reactor, the product (first-stage hydrogenate) mixed with the gas flows into exchanger *3*, air cooler *12*, and water cooler *20*, where it is cooled to the separation temperature. In separator *19*, the hydrogenate is separated from the circulating gas whose surplus is discharged from the system and whose main amount flows into compressor *16* and is returned for mixing with the stock.

The first-stage hydrogenate with the hydrocarbon gases, hydrogen sulphide, and ammonia dissolved in it is subjected to four-fold stabilization at a reduced pressure in separators *26-28* and column *29*. The dry and rich gases separated from the hydrogenate contain hydrogen sulphide and are therefore subjected to monoethanol purification in columns *4-6*. The dry gas and hydrogen sulphide are discharged from the plant, while the rich gases flow into the gas-separating unit (not shown in the diagram) for producing the C_3-C_4 fraction.

The first-stage hydrogenate is taken up from the bottom of column *29* by pump *13*, is mixed with the circulating second-stage hydrogen-containing gas and fresh hydrogen, and is fed into the second-stage reactor unit. The diagrams of the second-stage reactor unit and of

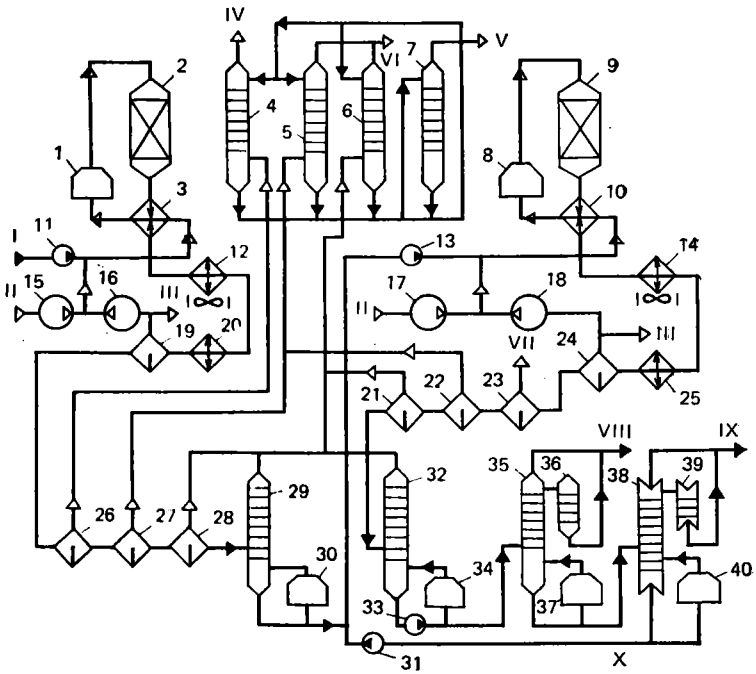

Fig. 74. Flow diagram of plant for the two-stage hydrocracking of vacuum gas oil:

1, 8, 30, 34, 37, 40—furnaces; *2, 9*—reactors; *3, 10*—heat exchangers; *4-7, 29, 32, 35, 36, 38, 39*—columns; *11, 13, 31, 33*—pumps; *12, 14, 20, 25*—coolers; *15-18*—compressors; *19, 21-24, 26-28*—separators; *I*—feed stock; *II*—hydrogen-containing reforming gas; *III* — hydrogen-containing gas for discharging; *IV*—dry gas; *V*—hydrogen sulphide; *VI*—rich gas; *VII*—hydrogen-containing gas from plant; *VIII*—gasoline; *IX*—diesel fuel; *X*—hydrocracking residue

the second-stage hydrogenate stabilization do not differ from those of the first stage. The second-stage stabilized hydrogenate is distilled into fractions in atmospheric column *35* and vacuum column *38*.

Unlike single-stage hydrofining and hydrocracking plants, the circulating hydrogen-containing gas is not scrubbed to remove hydrogen sulphide. The high separation pressure in the first stage dissolves the hydrogen sulphide in the hydrogenate, owing to which the hydrogen sulphide content in the gas is within the tolerated limits. In the second stage, a sweet stock is cracked, therefore very little hydrogen sulphide forms. Intermediate cooling for removing the heat of the reaction is performed by supplying cold circulation gas to the reactors directly between the catalyst layers.

Technological Conditions of the Process. The technological conditions of the process are as follows:

	Reactor Unit		
	1st Stage	2nd Stage (gasoline variant)	2nd Stage (diesel variant)
Overall pressure, MPa	15	15	15
Temperature, °C	425	425	400-415
Space velocity, h^{-1}	1	1	1-2
Hydrogen-containing gas-stock ratio, m^3/m^3	1000	1000	1000

Individual Apparatus

Temperature, °C		Pressure, MPa	
in separator *19*	50	in separator *19*	13
at bottom of column *29*	250	in separator *26*	9
at bottom of column *35*	240	in separator 27	2
at bottom of column *38*	395	in separator *28*	0.2
		in column *29*	0.15

Material Balance for Two Stage Hydrocracking. The material balance (in %) for a two-stage hydrocracking process is given below:

	1st Stage	2nd Stage (gasoline variant)	2nd Stage (diesel variant)
Feed			
Stock	100.0	100.0	100.0
Pure hydrogen	1.4	2.5	2.0
Total	101.4	102.5	102.0
Products			
Hydrogenate	92.3	91.4	93.2
including:			
IBP-85 °C fraction	—	(19.0)	(10.0)
85-195 °C fraction	—	(36.0)	(22.0)
195-345 °C fraction	—	(27.4)	(51.0)
Residue 345 °C-EBP	—	(9.0)	(10.2)
Hydrocarbon gas	6.0	10.0	7.7
including:			
C_1	(1.8)	(0.2)	(0.2)
C_2	(1.8)	(0.5)	(0.4)
C_3	(1.2)	(3.0)	(2.7)
C_4	(1.2)	(6.3)	(4.4)
Hydrogen sulphide	2.5	0.1	0.1
Ammonia	0.1	—	—
Losses	0.5	1.0	1.0
Total	101.4	102.5	102.0

Equipment. The reactor of a two-stage hydrocracking plant is in principle of the same design as of a single-stage one. It has two catalyst beds and a diameter of 3.4 m. Each reactor unit consists of two parallel reactors. The centrifugal stock pumps of the reactor units produce a head of 1700 m of liquid column.

7.14. Hydrofining and Hydrocracking of Residues

The growth in the total volume of petroleum refining and the simultaneous growth in the fraction of highly resinous and sour petroleums has posed the problem of processing a considerable amount of heavy residues, chiefly fuel oils and tars (residual stocks). The hydrocracking of these residues is being given great attention by refiners because pollution of the atmosphere is becoming a more and more acute social problem, and it can be solved only by developing processes for the production of furnace fuels containing not over 0.3-1.0% of sulphur. Although such processes have already been introduced on a pilot industrial scale, the main task of preventing rapid deactivation of the catalysts has not been solved.

A high metal content in the petroleum residues causes special difficulties from this viewpoint. The particles deposited on the catalyst hinder regeneration, while the frequent replacement of the spent catalyst with a fresh one raises the cost of the process. The deactivation of the catalyst is also increased by the presence of a large amount of resinous and asphaltenic substances in the tars and fuel oils.

The hydrocracking of residues has two trends at present: (1) the hydrodesulphurization of fuel oils to produce a low-viscosity and sweet furnace fuel or feed stock for catalytic cracking; and (2) deep hydrocracking to produce additional resources of motor fuels.

Several ways are used to produce sweet furnace fuels from fuel oils; two of them are called indirect hydrofining.

In the first case, about 60% of vacuum gas oil is distilled from the fuel oil and is hydrofined on a fixed-bed catalyst. The hydrofined product is mixed with the unpurified residue. The sulphur content cannot be lowered by more than 40-45% using this procedure, therefore it is suitable only for sweet fuel oils.

In the second case, as in the first one, vacuum gas oil is distilled from the fuel oil and is hydrofined. The tar is coked, and the coke distillate is hydrofined. This procedure yields a high-sulphur coke that finds no application.

A third and fourth methods provide for the direct hydrofining or hydrocracking on fixed- or moving-bed catalysts.

The process of hydrodesulphurization of fuel oils occurs under comparatively mild conditions on a fixed-bed catalyst. The fuel oil can first be subjected to deasphalting—the removal of resinous and asphaltenic substances. The technological diagram of the process and the equipment used for it do not differ in any way from the two-stage plant for the hydrocracking of vacuum gas oil (see Sec. 7.13).

Depending on the quality of the stock, the process parameters are varied within the following limits:

Temperature, °C	315-426
Pressure, MPa	4.2-20
Space velocity, h^{-1}	1.0-4.5
Hydrogen-stock ratio, m^3/m^3	700-1000

The result is the removal of 80% of the sulphur, 60-70% of metals, the carbon residue is reduced by 60%, the nitrogen content diminishes, and the viscosity lowers. Moreover, a small amount of gas and gasoline forms.

In addition to plants with a fixed-bed catalyst, there have been developed plants with a fluidized-bed catalyst that can be used to process a greater diversity of residues such as fuel oils, tars, heavy gas oils of coking and catalytic cracking, and resinous petroleums.

A hydrocracking process in a three-phase fluidized bed has been developed in the Soviet Union. Fine beads of an alumino-cobalt-molybdenum catalyst form the solid phase, a mixture of the unreacted stock with the already formed low-volatile products forms the liquid phase, and a mixture of hydrogen, hydrogen sulphide, ammonia, and hydrocarbon vapours forms the gas phase. This plant can be used to process even such heavy residual stock as the tars of Romashkino and Arlan petroleum with the production of diesel and furnace fuels. A drop in the activity of the catalyst is completely eliminated by its regular renewal without any change or violation of the technological conditions. The tars of Romashkino (I) and Arlan (II) petroleums are characterized below:

	I	II
Specific gravity, d_1^{20}	1.014	1.001
Initial boiling point	406	293
Fractional composition, %:		
distilled up to 350 °C	0	2
distilled up to 500 °C	15	28
Molecular mass	820	670
Carbon residue, %	18.52	16.2
Sulphur content, %	3.08	4.00
Vanadium content, g/tonne	216	250

At a hydrogen consumption from 1.1 to 1.4%, a temperature of 400 °C, a pressure of 10 MPa, a stock feed rate of 0.6 h^{-1}, and a hydrogen-containing gas-stock ratio of 1000 m^3/m^3, products of the following composition (in %) are obtained from the tars of I and II, respectively:

	I	II
Hydrocarbon gases	3.8	5.8
Gasoline IBP-180 °C	3.6	5.2
Diesel fuel	19.7	25.3
Residue (fraction above 350 °C)	72.9	63.7

The diesel fuel has a cetane number of 39-42, a pour point of about —22 °C, and a sulphur content of 0.2-0.3%.

The furnace fuel produced in the hydrocracking of Romashkino petroleum tar corresponds to Grade M-200 and contains 0.88% of sulphur and 67 g/tonne of vanadium. In the hydrocracking of the Arlan petroleum tar, the furnace fuel is of Grade M-100 and contains 1.3% of sulphur. In cold weather, it is better to produce light furnace fuel of Grade M-40 (a yield of 90.4-86.3% and a sulphur content of 0.7-1.0%) instead of diesel and furnace fuels.

Hydrogen Production. The broad development of petroleum treatment hydrogenation processes is impossible without sufficient hydrogen resources. The main amount of hydrogen at petroleum refineries is produced in catalytic reforming. But in the production of sweet products from sulphur-bearing and high-sulphur petroleums, and also in the hydrocracking of large volumes of petroleum stock, the demand for hydrogen cannot be satisfied only at the expense of platforming. Hydrogen can be produced additionally in two ways.

First, hydrogen can be separated from the methane-hydrogen fraction of gas-separating plants and from the discharged gases of hydrofining and hydrocracking plants. The volume content of hydrogen in these gases ranges from 30 to 60%. The most promising methods of producing hydrogen with a volume content of 96-99% is low-temperature fractionation, adsorption on molecular sieves, and absorption by petroleum fractions.

Second, hydrogen can be produced by special methods including the catalytic conversion of hydrocarbon gases with steam, the thermal decomposition of hydrocarbon gases, and the gasification of heavy, hydrocarbon stock.

Chapter 8

PETROLEUM GAS PROCESSING

8.1. Characteristic of Gases. Treatment and Drying

Characteristic of Petroleum Gases. Depending on the origin petroleum gases are divided into natural, casing-head, and artificial ones.

Natural gases are produced from independent fields, and casing-head gases together with petroleum. The technology of processing natural and casing-head gases is described in Chap. 4.

At refineries, gas is obtained in primary distillation and in the secondary processing of petroleum. Table 11 gives the composition of the gases produced in various processes. Gases of thermal and catalytic cracking contain a considerable amount of unsaturated hydrocarbons, while gases of catalytic reforming, hydrofining, and hydrocracking contain no unsaturated hydrocarbons.

Table 11. **Composition of Hydrocarbon Gases in Various Petroleum Treatment Processes (in %)**

Components	Primary distillation of petroleum	Thermal cracking of fuel oil under pressure	Coking		Catalytic cracking	Pyrolysis of gasoline stock	Catalytic reforming		Hydrocracking of heavy gas oil	Hydrofining of diesel fractions
			delayed	in fluidized bed			conventional conditions	rigorous conditions		
H_2+CO_2	—	0.2	0.4	1.5	2.5	16.0	8.5	5.5	—	—
CH_4	—	16.0	32.5	26.5	11.0	34.5	5.0	12.5	27.0	34.0
C_2H_4	—	2.5	4.5	12.5	6.0	29.3	—	—	—	—
C_2H_6	1.8	17.0	22.5	20.0	8.0	5.0	9.5	24.5	21.0	24.5
C_3H_6	—	9.0	4.0	12.5	22.0	10.5	—	—	—	—
C_3H_8	42.2	21.5	15.0	11.0	12.5	0.2	38.0	32.0	41.0	20.5
C_4H_6	—	—	—	0.7	—	1.5	—	—	—	—
iso-C_4H_8	—	4.5	2.2	5.0	6.0	1.3	—	—	—	—
n-C_4H_8	—	9.8	4.4	5.0	14.0	1.2	—	—	—	—
iso-C_4H_{10}	16.0	5.0	7.0	0.7	14.0	—	19.0	11.0	11.0	21.0
n-C_4H_{10}	40.0	14.5	8.5	4.6	4.0	0.5	20.0	14.5		
Sum of unsaturated components	—	25.8	15.1	35.7	48.0	43.8	—	—	—	—
Yield of gas, % of stock	1.0-3.5	7	7	12	17	77	12	23	1.8	0.8

The subsequent use of a gas depends on its composition. The gas of catalytic cracking rich in butylenes and isobutane is the best stock for catalytic alkylation plants. Hydrogen, or more precisely a hydrogen-containing gas with a volume fraction of hydrogen of 75-90%, is separated from the reforming gases. This gas is used for hydrogenation processes.

Many modern technological plants have units for the primary treatment of the gas. Here it is purified of hydrogen sulphide, and hydrocarbons with three or four carbon atoms are separated from it in the form of a liquid hydrocarbon fraction—the stabilizer overhead.

However, the gas is separated into individual hydrocarbons and narrow hydrocarbon fractions in specially built gas plants.

The processing of saturated hydrocarbons yields the following products, which are employed for various purposes:

(1) the ethane fraction—a pyrolysis stock, a coolant in oil dewaxing plants, etc.;

(2) the propane fraction—a pyrolysis stock, a coolant for many technological plants, a domestic liquefied gas, a solvent in the process of deasphalting residues;

(3) the isobutane fraction—a raw material for the production of synthetic rubber (isoprene and butyl rubber), it is used in alkylation plants;

(4) the butane fraction—a raw material for the production of synthetic rubber, a stock for pyrolysis, and a component of liquefied domestic gas, an additive to motor gasoline to impart the required vapour pressure to it;

(5) the isopentane fraction—a raw material for the production of isoprene rubber, a component of high-octane gasolines;

(6) the pentane fraction—a stock for isomerization and pyrolysis processes.

The following fractions are separated from the gases containing unsaturated hydrocarbons:

(1) the propane-propylene fraction—a raw material for the production of polymer gasoline, phenol and acetone, synthetic detergents, and butanols;

(2) the butane-butylene fraction—a raw material for alkylation and polymerization plants, is used in the production of synthetic rubbers, additives to oils, methylethylketone, methyl-*tert*-butyl ether.

The quality of the liquefied gases is determined by the relevant specifications.

Treatment of Gases. The gases produced in the processing of sour petroleums always contain hydrogen sulphide and some other sulphur-bearing compounds. There is an especially large amount of hydrogen sulphide in the gases of plants processing heavy stock such as fuel oil, vacuum distillates, and tar. Thus, the gas produced in

the catalytic cracking of the vacuum distillate of Arlan petroleum contains 13-15% of hydrogen sulphide, while the gases produced in the thermal cracking of tar of this petroleum contain up to 20% of hydrogen sulphide.

Hydrogen sulphide impairs the functioning of the catalysts of catalytic processes using liquefied gases as their feed stock; its presence must never be tolerated in domestic liquefied gas. The presence of active sulphur-containing compounds adversely affects the equipment of gas-processing plants and causes intensive corrosion of the apparatus and pipelines.

This is why the hydrocarbon gases containing hydrogen sulphide and the lower mercaptans must be purified. Sometimes the gases of petroleum processing are also purified of carbon monoxide and dioxide.

There are dry and wet purification methods. The former include purification with the use of zinc and iron oxides, activated carbon, and zeolites (molecular sieves). Solid absorbents are generally employed to purify gases with a low hydrogen sulphide content.

Wet methods using the absorption principle are customarily used to purify gases containing a large amount of acid components (hydrogen sulphide, carbon dioxide). Purification is based on the fact that at moderate temperatures the hydrogen sulphide is absorbed with the formation of an unstable chemical compound, while when the temperature of the solution is raised, this compound decomposes. The absorbent is regenerated. The process of solvent regeneration is called desorption.

The following absorption methods are used at petroleum refineries:

(1) arsenic-soda purification, in which the absorbent is sodium pentathioarsenate. The latter forms sodium hexathioarsenate when it reacts with hydrogen sulphide:

$$Na_4As_2S_5O_2 + H_2S \rightarrow Na_4As_2S_6O + H_2O$$

When the saturated absorbent is regenerated, elemental sulphur evolves:

$$2Na_4As_2S_6O + O_2 \rightarrow 2Na_4As_2S_5O_2 + 2S$$

(2) purification with a tripotassium phosphate solution:

$$K_3PO_4 + H_2S \rightleftharpoons K_2HPO_4 + KHS$$

(3) purification with a hot solution of potassium carbonate (potash):

$$K_2CO_3 + H_2S \rightleftharpoons K_2S + H_2CO_3$$

(4) alkaline purification:

$$2NaOH + H_2S \rightarrow Na_2S + 2H_2O$$

Purification employing solutions of mono- and diethanolamines (MEA and DEA) is the most popular at chemical and refining en-

terprises. The following reversible absorption-desorption reactions occur in this process:

$$\underset{\text{Monoethanolamine}}{NH_2CH_2CH_2OH} + H_2S \rightleftharpoons CH_2CH_2OHNH_3HS$$

$$\underset{\text{Diethanolamine}}{NH(CH_2CH_2OH)_2} + H_2S \rightleftharpoons (CH_2CH_2OH)_2NH_2HS$$

At 25-35 °C, the hydrogen sulphide reacts with the ethanolamines to form an acid salt of hydrogen sulphide and a substituted ammonium base. At 100 °C and higher, the reaction proceeds almost completely in the reverse direction, i.e. hydrogen sulphide evolves, and the ethanolamine is recycled. The absorptivity of the ethanolamines grows with lowering of the absorption temperature and increasing of the pressure or of the recirculation ratio.

The merits of the process employing MEA include the high activity of the absorbent, its low cost, stability, and easiness of regeneration. But MEA is characterized by an increased consumption of heat energy for regeneration, unstability to the action of CS_2, COS, and O_2, with which MEA enters into irreversible reactions, and an increased corrosive activity.

The merits of DEA include a lower vapour pressure than that of MEA and, consequently, lower losses due to evaporation, and stability to CS_2, COS, and O_2. But DEA is characterized by a lower chemical activity and a lower absorptivity. It is less efficient in the removal of mercaptans.

Monoethanolamine purification units are included in plants for catalytic reforming and cracking, hydrofining of distillates, and in gas plants. Purification is performed at 35-40 °C and the pressure of the basic technological process. The MEA solution is regenerated at a temperature not over 125-130 °C because at higher temperatures these solutions rapidly decompose.

Not only gases directed for fractionation, but also commercial liquefied hydrocarbon fractions are purified from hydrogen sulphide. The commercial fractions are also purified with monoethanolamine and an alkali. The use of the latter guarantees complete removal of the hydrogen sulphide and lower mercaptans, but it is associated with the appearance of wastes (i.e. residues that cannot be utilized).

The hydrogen sulphide produced in gas purification is directed to a plant producing sulphur or sulphuric acid. Recent years have seen the Klaus method coming into favour. It is based on the thermocatalytic reaction of the air oxygen with hydrogen sulphide. The reaction proceeds in two stages:

$$H_2S + 1.5O_2 \rightarrow H_2O + SO_2$$

$$2H_2S + SO_2 \rightarrow 2H_2O + 3S$$

$$\overline{3H_2S + 1.5O_2 \rightarrow 3H_2O + 3S}$$

Drying of Gases. Drying is needed when a gas is directed for catalytic processing with the use of a catalyst sensitive to water or when fractionation and further treatment of the gas are performed at low temperatures. If an undried gas is cooled to below 0 °C, this may cause clogging of the apparatus and pipelines with ice.

Attention must also be given to the ability of hydrocarbons and some other gases to form crystallohydrates with water. These are unstable complexes of gas and water molecules. Among them are crystallohydrates of ethane $C_2H_6 \cdot 7H_2O$ and propane $C_3H_8 \cdot 18H_2O$. Hydrogen sulphide and water also form the hydrate $H_2S \cdot 5H_2O$. Crystallohydrates appear in pipelines and apparatus at temperatures below 15 °C in the form of a gray mass similar to ice.

The lower the molecular mass of a hydrocarbon, the higher are the temperature and pressure at which it can form crystallohydrates. The crystallohydrate of methane forms at 12.5 °C and 10.0 MPa, whereas ethane at this temperature forms a hydrate already at 2.5 MPa. Hydrates exist only if the partial pressure of water vapour in the gas phase is higher than the hydrate vapour pressure. Therefore, when drying gases, one should lower their moisture content by such an extent that the partial vapour pressure of water becomes lower than the saturated vapour pressure of the hydrates. The moisture content of gases in practice is shown by their **dew point.** When a gas is cooled to below this point, the water vapour contained in it condenses and precipitates in the form of a "dew".

Solid and liquid absorbents are used to dry a gas. They must meet the following requirements: a high moisture capacity, i.e. the ability to absorb a lot of moisture per unit mass or volume, good regeneration properties, a prolonged service life, a low cost, and simplicity of preparation. Among solid absorbents, these requirements are met the most by active alumina, silica gel, and synthetic zeolites, and among liquid ones, by di- and triethyleneglycol.

The extent of drying depends on the absorbent employed. Thus, when drying with diethyleneglycol, the dew point is lowered to —20 °C, while the use of active alumina lowers it to —70 °C. Zeolites lower the moisture content in a gas to 0.001%, and the dew point to below —75 °C.

When using active adsorbents for drying refinery gases, one must have in view that the adsorbents may cause the unsaturated hydrocarbons contained in the gas to polymerize. Pyrolysis gases especially tend to polymerize.

8.2. Separation of Gases

Ways of Separating Gas Mixtures. The following processes are used to separate a mixture of gases into individual components or technical fractions suitable for further processing: condensation,

compression, absorption, rectification, and adsorption. Various combinations of these processes are employed at gas plants.

Condensation is the first step in gas separation. It transfers a gas into a two-phase system, and the latter is then mechanically separated into a gas and liquid. Water or air is chiefly used as the coolant. In this case, the condensation temperature is 35-40 °C. To increase the number of condensing components, the condensation temperature must be lowered. This is done by employing evaporating ammonia, ethane, propane, and the like as the coolants. Propane and ammonia can lower the condensation temperature to —40 °C, and ethane to —80 °C.

Compression is used in gas separating arrangements together with condensation. When the gas pressure is increased, more favourable conditions are provided for condensation of the hydrocarbons. The heaviest components condense first of all from a compressed gas.

Absorption is a process of extracting individual components of a gas by a liquid (absorbent) coming into contact with it. The efficiency of absorption depends on the temperature and pressure at which the process is being conducted, the physicochemical properties of the gas and the absorbent used, the velocity of the gas being absorbed, and the amount of absorbent supplied.

A definite gas component is absorbed when the partial pressure of this component in the gas phase exceeds its partial pressure in the vapours in equilibrium with the absorbent liquid and entering into contact with the gas. Consequently, the intensity with which the component being extracted from a gas is absorbed by the absorbent is proportional to the difference of these partial pressures. Moreover, the amount of absorbed component is proportional to the duration and surface of contact of the liquid and gas phases.

The effect of the pressure on the absorption process is determined by Henry's law. By this law, the solubility of a gas in a liquid is proportional to its partial pressure in the vapour over the liquid. If the pressure over a solution is increased without changing the temperature, new amounts of the gas will pass into the liquid. An increase in the pressure facilitates absorption.

When the temperature is raised, the solubility of a gas in a liquid diminishes, the absorption slows down, and may stop completely. A temperature of not over 35 °C is maintained in technological plants when extracting propane and butane from a gas.

The choice of the absorbent depends on the properties of the adsorbate gas. Hydrocarbon gases are extracted the best by liquid hydrocarbons of light gasoline that are close to them in structure and molecular mass. Since the light absorbent has a high vapour pressure, it is entrained to a considerable extent by the gas leaving the absorber. Two-stage absorption is generally used in absorption plants. The gasoline fraction is the main absorbent, and next the gas leav-

ing the absorber is scrubbed by a liquid of a heavy fractional composition, for example, the kerosene and gas oil fraction, to extract the entrained gasoline from the gas.

The absorption of a gas by a liquid is attended by the evolution of heat. A number of special procedures are used in technological plants to retain good conditions of absorption. An effective way of increasing the degree of extraction of the target components is to cool the absorbent and gas prior to feeding them into the absorber to a temperature lower than the working one. The heat of absorption is removed in intermediate separate coolers. The saturated absorbent taken from a higher plate flows by gravity or is pumped through coolers and is then returned to a lower plate. Not only water, but also coolants such as propane and ammonia are employed to cool the feed stock and the circulating absorbent.

The absorbed gas is separated from the absorbent in a stripping column (desorber). Desorption requires conditions opposite to those necessary for absorption, i.e. a high temperature and a low pressure.

The *adsorption method* of gas separation is employed only on a small scale in the industry. It is based on the ability of some solids with a developed surface (activated carbon, silica gel, etc.) to selectively adsorb different components of a gas. Like liquid absorbents, solid adsorbents adsorb heavy hydrocarbons more intensively. A sufficiently dry gas can be obtained by selecting a definite adsorption regime. Adsorption is employed to extract target components from mixtures in which the content of the hydrocarbons being extracted does not exceed 50 mg/m^3, and also from gases containing air.

Rectification is the terminal stage of gas mixture separation. It is used to produce individual hydrocarbons of a high purity. Since it is difficult to separate a mixture of gases into its components, in the existing gas-separating arrangements a liquid separated from the gas by the condensation-compression or absorption method is delivered for rectification. A feature of rectification of liquefied gases in comparison with rectification of petroleum fractions is the need to separate substances having very close boiling points and produce commercial products with a high degree of purity. Rectification of liquefied gases is also distinguished by an increased pressure in the columns because to create a reflux, it is necessary to condense the overhead products of the rectification columns in conventional air and water coolers without resorting to artificial cold. To condense, for example, isobutane at 40 °C, a pressure of at least 0.52 MPa has to be maintained in the reflux space of the butane column and, consequently, in the column itself.

The layout of a rectification plant and the sequence of separating the individual components depend on the composition of the initial mixture, the required purity of the products, and the number of fractions obtained.

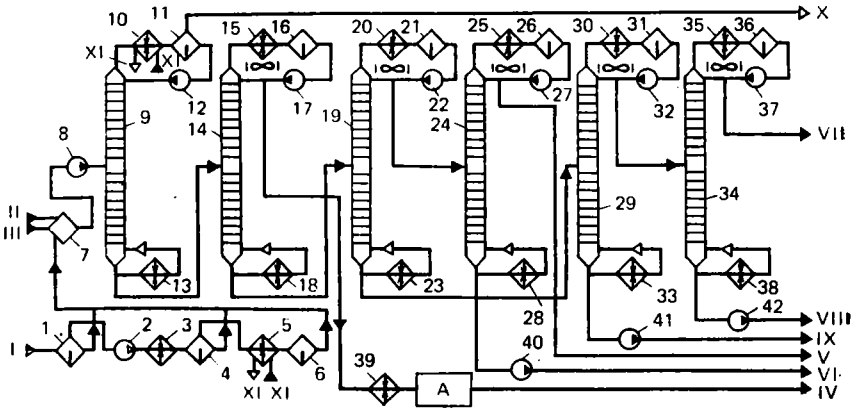

Fig. 75. Flow diagram of a gas plant of the condensation-compression-rectification type:

1, 4, 11—separators; *2, 6, 8, 12, 17, 22, 27, 32, 37, 40-42*—pumps; *3, 5, 10, 15, 20, 25, 30, 35*—condensers and coolers; *7, 16, 21, 26, 31, 36*—tanks; *9, 14, 19, 24, 29, 34*—columns; *13, 18, 23, 28, 33, 38*—boilers; *39*—cooler; *A*—purification unit; *I*—gas from primary petroleum distillation plants; *II*—stabilizer overhead of primary distillation plants; *III*—stabilizer overhead of catalytic reforming; *IV*—propane; *V*—isobutane; *VI*—butane; *VII*—isopentane; *VIII*—pentane; *IX*—compression-process gasoline (C_6 and higher); *X*—dry gas; *XI*—ammonia

Gas Plants. Gas plants are divided by the type of feed stock into saturated and unsaturated gas plants, and by the type of equipment used to extract the target components into condensation-compression and absorption plants. In both of the latter two types of gas plants, the liquid hydrocarbon mixture extracted from the gas is next separated into fractions or individual hydrocarbons with the use of rectification.

Figure 75 shows a typical flow diagram of a saturated gas plant employing condensation, compression, and rectification processes. The feed stock is gas from primary distillation plants and stabilizer overheads from catalytic reforming and primary distillation plants.

The gas from the primary distillation plants is fed through separator *1* for compression by compressor *2*. Compression heats the gas to 120 °C. The compressed gas is then condensed in water condenser and cooler *3* and in condenser and cooler *5* cooled by evaporating ammonia. In condenser *3*, cooling and condensation terminate at 40 °C, and in condenser *5*, at 4 °C. In collecting tank *7*, the stabilizer overhead is added to the gas condensate. The resulting mixture is fed by pump *8* for rectification.

In the rectification unit, methane and ethane are first removed from the stock. This is performed in deethanizer column *9* operating under conditions of incomplete condensation. Ammonia condenser and cooler *10* cools the overhead fraction of the column to 0 °C. The condensed part is used as a reflux, while the remaining amount is withdrawn from reflux separator *11*.

The deethanized fraction from column *9* flows into depropanizer column *14* whose overhead product is propane, and whose bottom product is the depropanized fraction. The overhead product is condensed in air condenser and cooler *15*, cooled in terminal cooler *20*, and is withdrawn from the plant after alkaline purification. The bottom product from depropanizer column *14* flows by gravity into debutanizer column *19*.

A butane and isobutane mixture is the rectificate of column *19*, and debutanized light gasoline is the residue. The rectificate is condensed in condenser and cooler *20*, and is then fed for separation into butane column *24*. The residue from column *19* passes into depentanizing column *29*.

The butane column separates the butane mixture into normal butane and isobutane, while column *29* separates the pentanes from the light gasoline. The pentanes are then fed into column *34* where they are separated into isopentane (removed from the top) and pentane. The bottom product of column *29* is compression-process gasoline (the fraction C_6 and higher).

It is not expedient to employ the above process for gases rich in methane because the high partial pressure of the methane in the reflux tank of the deethanizer does not make it possible to ensure even partial condensation of the gas. The deethanizer will not operate efficiently. Gases rich in methane are fractionated in absorption-rectification plants. A flow diagram of such a plant intended for fractionating gases of catalytic and thermal cracking plants is shown in Fig. 76.

The gas from the catalytic cracking plant compressed by a compressor to 1.4 MPa and the gas from the thermal cracking plant under its own pressure are fed under the 22nd plate of column *1* called a fractionating absorber. The compression condensate and unstable gasoline are also fed into column *1*. The liquid fractions are fed in above the gas inlet. The fractionating absorber, also known as an absorber-desorber, differs from a conventional absorber in that it is a combined column. Its upper part is the site of absorption of the target components from the gas, while its lower part is the site of absorbent regeneration at the expense of the heat supplied thereto. While flowing down over the fractionating absorber plates, the absorbent saturated by the heavy components encounters hotter and hotter vapours desorbed from the liquid flowing down into the bottom part of the column. A dry gas containing C_1 and C_2 hydrocarbons is withdrawn from the top of the fractionating absorber, while C_3 and C_4 hydrocarbons together with the lean absorbent are withdrawn from the bottom. Unlike conventional absorbers fed with the stock only in the gas phase, in fractionating absorbers the stock is fed in both as a liquid and a gas.

The employment of absorbents varying in composition makes

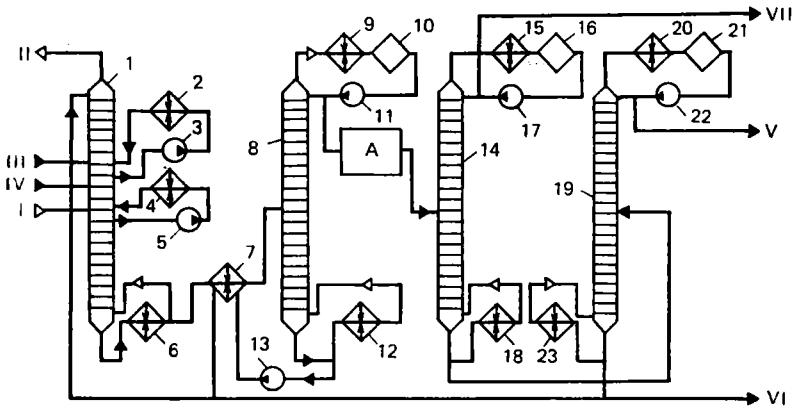

Fig. 76. Flow diagram of an absorption-rectification gas plant:
1, 8, 14, 19—columns; *2, 4*—coolers; *3, 5, 11, 13, 17, 22*—pumps; *6, 12, 18, 23*—boilers; *7*—heat exchanger; *9, 15, 20*—condensers and coolers; *10, 16, 21*—tanks; *A*—purification unit; *I*—rich gas; *II*—dry gas; *III*—unstable gasoline; *IV*—compression condensate; *V*—butane-butylene fraction; *VI*—stable gasoline; *VII*—propane-propylene fraction

it possible to achieve a high degree of extraction of the target components in a fractionating absorber. The absorbents are fed into column *1* in a strict sequence, the light one into the bottom and the heavy one into the top part. The required temperature is maintained in the absorption part by intermediate cooling of the absorbent. The saturated and deethanized absorbent from column *1* is fed into stabilizer column *8* whose overhead product is the stabilizer overhead, and whose bottom product is stable gasoline. The latter via the heat exchanger heating the stock is withdrawn from the plant. Part of the stable gasoline is supplied to the top part of the fractionating absorber as the heavy absorbent.

The stabilizer overhead flows to the purification unit where it is purified of sulphurous compounds by a monoethylamine solution and an alkali. Next the propane-propylene fraction is separated from the purified overhead in propane column *14*. The residue from this column is further separated in butane column *19* into the butane-butylene fraction and compression-process gasoline (the fraction C_5 and higher). This gasoline is then blended with the stable gasoline.

8.3. Alkylation of Branched-Chain Alkanes with Alkenes

8.3.1. Mechanism and Catalysts of Process

The propane-propylene and butane-butylene fractions obtained in the fractionation of unsaturated gases are used for producing high-octane components of gasoline by methods of selective

catalytic polymerization (oligomerization) and alkylation.

The technological process of **alkylation** is based on the reaction of the combination of alkenes and alkanes, which in the general form is described by the equation

$$C_nH_{2n+2} + C_mH_{2m} \rightarrow C_{n+m}H_{2(n+m)+2} + Q$$

By selecting the relevant initial hydrocarbons, one can obtain any alkane in one stage. In practice, a mixture of high-octane isoalkanes called an alkylate can be produced in this way.

Hydrocarbons with both a low and a high molecular mass can be subjected to alkylation. But only the reaction of C_3 to C_5 hydrocarbons is of a practical significance for producing gasoline components. Of the alkanes, methane and ethane do not enter into a reaction. Isobutane having a mobile hydrogen atom at the tertiary carbon atom is readily alkylated. Moreover, the branched structure of isobutane predetermines the most advantageous structure of the synthesis products with respect to the antiknock properties. This is why isobutane is the initial alkane stock in all industrial alkylation processes. Among the alkenes, the C_3-C_5 hydrocarbons are employed for the alkylation of isobutane.

Alkylation proceeds with the evolution of heat and a reduction in volume. Consequently, on the basis of Le Châtelier's principle, this reaction is favoured by low temperatures and high pressures. It is best to conduct alkylation at temperatures close to 0 °C, a lower temperature being used when the molecular mass of the alkene is higher. In the absence of catalysts, the alkylation reaction does not virtually proceed at low temperatures, however.

Catalytic alkylation is widely used in the industry. The best catalysts for this reaction are acidic complexing ones such as aluminium chloride promoted with hydrogen chloride, sulphuric acid, and liquid hydrogen fluoride. At Soviet industrial plants, alkylation is performed in the presence of sulphuric acid; in other countries, sulphuric acid and hydrogen fluoride are used.

The alkylation reaction in the presence of acidic catalysts follows a chain carbonium ion mechanism. Let us consider it using the sulphuric acid alkylation of isobutane by 1-butylene as an example.

In the *first stage*, the alkene reacts with the catalyst, which donates its proton:

$$CH_3-CH_2-CH=CH_2 + H_2SO_4 \rightarrow CH_3-CH_2-\overset{+}{C}H-CH_3 + HSO_4^-$$

Next isobutane is involved in the reaction:

$$CH_3-\underset{\underset{CH_3}{|}}{\overset{CH_3}{\overset{|}{C}}}H + CH_3-CH_2-\overset{+}{C}H-CH_3 \rightarrow CH_3-\underset{\underset{CH_3}{|}}{\overset{CH_3}{\overset{|}{C}}}{}^{+} + C_4H_{10}$$

A reaction of combination with the unsaturated hydrocarbon develops further with the participation of the tertiary carbonium ion.

The *second stage* is propagation of the chain with the formation of a new carbonium ion:

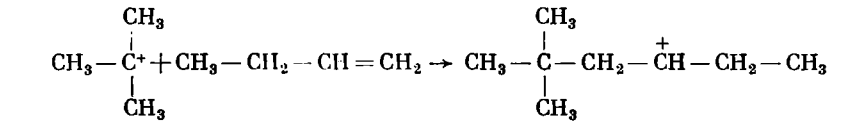

The *third stage* is an especially complicated one owing to various transformations. First, hydrogen migrates, and the location of the charge changes.

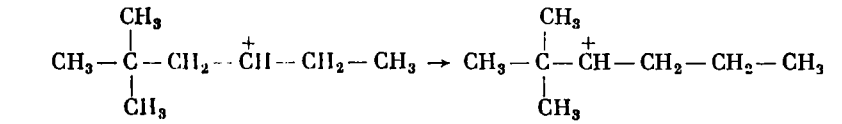

Hydrogen migrates the most readily from the group $-CH_2-$, more difficultly from the group $>CH-$, and it does not migrate at all from the methyl group $-CH_3$.

Second, skeleton isomerization—the migration of a methyl group to the carbon carrying a charge—occurs at a high rate:

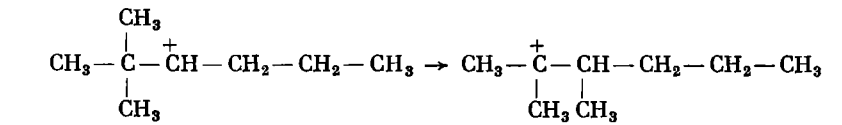

Migration of a methyl group is most probable from the quaternary carbon atom, but it may also occur from the tertiary one.

All the isooctyl ions formed in this stage in the long run react with isobutane and detach hydrogen from the tertiary carbon atom, for example:

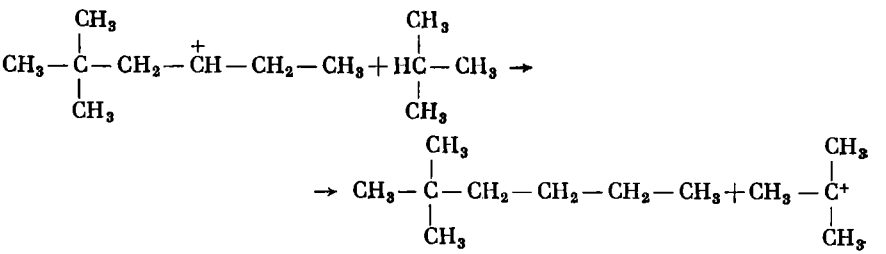

In this stage, the reaction product forms, an active tertiary carbonium ion forms again, and the reaction continues with new molecules of the initial alkene.

A variety of side processes occur under the conditions of alkylation, namely, (a) destructive alkylation, (b) hydrogen redistribution, and (c) polymerization and depolymerization.

By **destructive alkylation** are meant reactions of decomposition and synthesis—decomposition of the obtained isoalkanes with a cyclic structure into new hydrocarbons that, in turn, enter into an alkylation reaction with isobutane, for example:

$$iso\text{-}C_4H_{10} + C_4H_8 \rightarrow \sum C_8H_{18}$$

$$C_8H_{18} \rightarrow C_5H_{12} + C_3H_6$$

$$iso\text{-}C_4H_{10} + C_3H_6 \rightarrow \sum C_7H_{16}, \text{ etc.}$$

Hydrogen redistribution manifests itself in the partial dehydrogenation of isobutane to isobutylene. The latter alkylates isobutane with the formation of isooctane. Thus, in the alkylation of isobutane with propylene, isooctanes form in addition to isoheptanes:

$$iso\text{-}C_4H_{10} \rightarrow iso\text{-}C_4H_8 + H_2$$

$$C_3H_6 + H_2 \rightarrow C_3H_8$$

$$iso\text{-}C_4H_{10} + iso\text{-}C_4H_8 \rightarrow iso\text{-}C_8H_{18}$$

We can write the overall process as follows:

$$2iso\text{-}C_4H_{10} + C_3H_6 \rightarrow iso\text{-}C_8H_{18} + C_3H_8$$

Such transformations are called **autoalkylation**. This direction is not desirable because it results in the excessive consumption of isobutane.

The best results—the maximum yield of alkylate, the highest octane number of alkylate gasoline, and the minimum contamination of the products by esters, are achieved at a sulphuric acid concentration from 90 to 94%.

At low sulphuric acid concentrations, its protonic strength diminishes, the hydrogen migration processes retard, and the selectivity of the process lowers, which leads to polymerization of the alkenes with the formation of heavy products.

The reduction in the octane number of the alkylate at acid concentrations above 94% is explained by the increased catalytic activity of the acid and, consequently, by the rapid proceeding of the conversion of the trimethylpentanes into hydrocarbons with a lower octane number and by a greater yield of C_5-C_7 hydrocarbons.

8.3.2. Isobutane Alkylation Plant

Feed Stock and Commercial Products. The butane-butylene (b.b.) fraction produced at gas plants from catalytic cracking, thermal cracking, and coking gases is generally the feed stock of isobutane alkylation plants. This fraction contains both unsaturated hydro-

carbons—butylenes, and isobutane. It is desirable that the butylene: isobutane ratio in the stock be 1:1.2. If this ratio is not observed, isobutane should be added from a different source. The b.b. fraction also contains butane and C_3 and C_5 hydrocarbons. The alkanes other than isobutane do not enter into the alkylation reaction, but detract from the conditions of conducting the process because they occupy space in the reaction zone and lower the isobutane content. The presence of propylene in the stock increases the amount of cold needed because of the higher heat of the propylene alkylation reaction, lowering of the alkylate octane number, and the increase in sulphuric acid consumption. The presence of amylenes is also not desirable because by-products of a low value form from them.

The prospects of development of the alkylation process are associated with the expansion of the feed stock resources and the use of the propane-propylene (p.p.) fraction as the stock. When this fraction is used, isobutane has to be added to the stock.

The alkylation of isobutane yields an alkylate that is divided into a light and heavy fractions. The former is employed as a component of motor and aviation gasolines, and the latter as a component of diesel fuel. The light alkylate has the following quality indices: a specific gravity d_4^{20} = 0.698-0.715, octane number without TEL = 92-98, with an addition of 0.8 ml of TEL per litre = 104-106, saturated vapour pressure at 38 °C = 20.6 kPa, IBP = 45-57 °C, 50% boils at 100-104 °C, and EBP = 150-170 °C.

Propane and the butane-pentane fractions are obtained as by-products at the plants.

Process Parameters. The most important parameters of an alkylation process are the temperature, pressure, duration of contacting, and the ratio between the isobutane and alkene and between the catalyst and alkene.

The *temperature* affects the rate of consumption of the catalyst, the yield and quality of the alkylate. The best conditions of the process are achieved at 5-13 °C. Elevation of the temperature facilitates the mixing of the acid and hydrocarbons because the viscosity diminishes, but this is attended by acceleration of the side reactions of polymerization and sulphurization (oxidation) of the alkenes. Lowering of the temperature increases the selectivity of the reaction of alkylation, reduces the consumption of the catalyst, and increases the yield of the alkylate. At temperatures below 5 °C, however, the viscosity of the hydrocarbons grows, and the mobility of the sulphuric acid decreases. The poorer contact of the acid with the hydrocarbons results in more electric energy being required for mixing.

The *pressure* only slightly affects the process. It is kept within such limits that the lightest components participating in the reaction will be in the liquid phase.

The duration of contacting the feed stock with the catalyst is determined by the **space velocity**, which is defined to be the quotient obtained by dividing the volume of the stock fed in unit time by the volume of the acid in the reactor. In modern alkylation plants, the space velocity is 0.3 h^{-1}. Other conditions being equal, an increase in the space velocity leads to lowering of the octane number of the alkylate. The duration of contacting is also affected by the design of the reactor and the efficiency of mixer operation.

Mixing increases the surface area of the phase interface and improves the conditions of isobutane absorption by the sulphuric acid. Since the isobutane is absorbed by the acid much more slowly than the alkenes, conditions must be provided in the reactor that accelerate the transition of the isobutane into the acid. Otherwise, an intensive reaction of alkene polymerization in the presence of sulphuric acid will begin. Moreover, if the mixing is insufficiently intensive, not all the acid may contact the hydrocarbon feed stock.

The optimal *catalyst* (sulphuric acid)-*to-alkene ratio* varies from 1:1 to 1.6:1. At such a ratio, a homogeneous emulsion of the hydrocarbons in the acid forms. An increase in the amount of acid used improves the conditions of the alkylation reaction and increases the octane number of the alkylate.

The choice of the proper isobutane-to-alkene ratio in the reaction zone plays a major role in preventing polymerization reactions. A molar isobutane-to-alkene ratio of (5-10):1 is maintained in industrial plants in the hydrocarbon mixture delivered for alkylation.

From the viewpoint of saving energy resources, it is good practice to maintain a higher catalyst-to-alkene ratio and lower the isobutane-to-alkene one.

Flow Diagram. Figure 77 gives the flow diagram of a plant for the sulphuric acid alkylation of isobutane by the butane-butylene fraction. The plant consists of sections for preparation of the stock, reaction, treatment of the hydrocarbon mixture, and product fractionation. In the stock preparing section (not shown in the diagram), hydrogen sulphide and mercaptans are removed from the butane-butylene fraction by alkaline and aqueous scrubbing. Here also the stock is dried in water separators, settling tanks, gravel filters, or electrical separators. Adsorbents such as alumina and zeolites are also used for drying.

Next the stock enters the reactor section. In tank *1* it is mixed with the circulating isobutane and then fed by pump *2* through a heat exchanger and cooler into contact type reactor *3*. Sulphuric acid is fed into the reactor together with the stock and comes into contact with the butane-butylene fraction.

The products from reactor *3* are directed into separator *4* where they are separated from the sulphuric acid. The latter is recycled

by pump *5* to the reactor, while the hydrocarbons are fed through exchanger *6* to the hydrocarbon mixture treatment section. Here the mixture is freed of droplets of sulphuric acid and esters by alkaline and aqueous scrubbing. Mixer *7*, settling tanks *8* and *10*, and circulation pumps *9* and *12* are intended for this. In new alkylation plants, the products are purified from esters of sulphuric acid in bauxite purification units.

In the reaction of isobutane with butylenes, heat is evolved in an amount of 750-1100 kJ per kg of alkylate, and artificial cooling is employed to remove it. Ammonia is the coolant. It circulates in the cooling system. The ammonia compressed by compressor *13* condenses in condenser and cooler *14*, is gathered in tank *15*, and is then fed

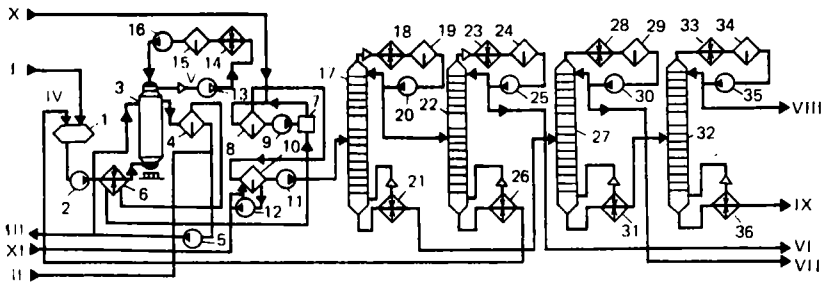

Fig. 77. Flow diagram of an alkylation plant:

1, 15, 19, 24, 29, 34—tanks; *2, 5, 9, 11, 12, 16, 20, 25, 30, 35*—pumps; *3*—reactor; *4*—separator; *6*—heat exchanger; *7*—mixer; *8, 10*—settling tanks; *13*—compressor; *14, 18, 23, 28, 33*—condensers and coolers; *17, 22, 27, 32*—columns; *21, 26, 31, 36*—boilers; *I*—feed stock from purification section; *II*—fresh sulphuric acid; *III*—spent sulphuric acid to regeneration; *IV*—circulating isobutane; *V*—ammonia; *VI*—propane; *VII*—butane-pentane fraction; *VIII*—light alkylate; *IX*—heavy alkylate; *X*—fresh solution of alkali; *XI*—water

by a pump into the pipe bundle of reactor *3* where it evaporates at the expense of a reduction in the pressure and elevation of the temperature. When evaporating, the ammonia removes the excess reaction heat. The gaseous ammonia is recycled for compression.

The purified hydrocarbon fraction is fed to the rectification unit. In column *17*, called an isobutane one, propane and the excess isobutane that has not entered into a reaction are separated. Next in propane column *22*, the isobutane is separated from the propane and is recycled for mixing with fresh stock. The mixture of butane, pentane, and alkylate from the bottom of column *17* is fed into butane column *27*. The overhead product of this column is the butane-pentane fraction, and the bottom product is the summary alkylate, which is then divided into the light and heavy alkylates in secondary distillation column *32*.

Technological Conditions. The technological conditions of the plant are as follows:

	Bottom temperature, °C	Top temperature, °C	Pressure, MPa
Reactor	0-10	0-10	0.6
Rectification columns:			
isobutane *17*	95-120	45-55	0.5-0.6
propane *22*	85-100	40-45	1.6-1.7
butane *27*	125-135	45-50	0.3-0.4
secondary distillation *32*	up to 220	100-115	0.02-0.04

Equipment. The reactor is the main apparatus of an alkylation plant. There is a variety of alkylation reactors differing in the way of feeding in the stock and the cooling facilities. They can be divided into three types:

(1) capacity—with the use of external circulating pumps for agitating the reaction mixture (they are not employed at modern plants);

(2) contactor—with internal circulation facilities and cooling elements;

(3) cascade—with internal cooling and internal circulation facilities, without cooling elements.

Figure 78 shows a reactor of the contactor type. The reactor houses two bundles of pipes of different diameters, each small-diameter pipe freely fitting into the mating large-diameter one. The reactor coolant is distributed between the small-diameter pipes and flows downward. Next it passes into the large-diameter pipes, rises in them, and evaporates, removing heat from the reaction mixture in the intertubular space. The coolant is withdrawn from the reactor for compression.

The reaction mixture is agitated by propeller mixer *4*. The mixture from the annular space between the reactor wall and inner cylindrical housing *2* flows into the housing accommodating the cooling pipes. The alkylation process mainly occurs in the descending movement of the reaction mixture along the cooling surface (pipe bundle).

All new alkylation plants are being provided with the most efficient cascade self-cooling reactors. The reaction heat is removed in them by evaporating part of the reactants. A reactor (Fig. 79) has several reaction zones provided with mixing devices, and two settling zones. A mixture of alkenes and isobutane is fed into each reaction zone. The pressure of the process is regulated so as to ensure partial evaporation of the hydrocarbon phase. The evaporating hydrocarbons are withdrawn from the top part of the reactor by a compressor, are compressed, condense, and are recycled into the reactor. A constant temperature is maintained in the reactor by changing the amount of evaporating gas. Cascade reactors have been designed that consist of five or six reaction and one or two settling sections (zones). The

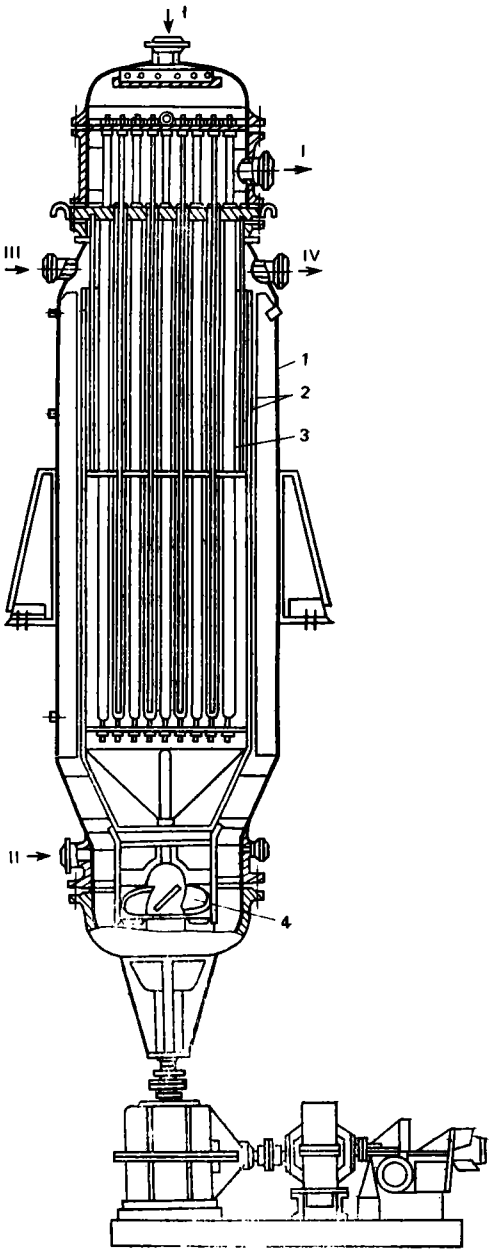

Fig. 78. Vertical alkylation reactor of the contactor type:
1—body; *2*—cylindrical housing; *3*—pipe bundle; *4*—propeller mixer; *I*—coolant; *II*—feed stock; *III*—sulphuric acid; *IV*—reaction products

acid is withdrawn for regeneration and the alkylate for separation from the settling sections.

Cascade reactors differ from tubular ones in the simplicity of their design and their high capacity. The specific consumption of sulphuric acid for plants of approximately the same capacity under identical conditions of alkylation is 200-250 kg per tonne of alkylate in a vertical reactor and 60-100 kg per tonne in a cascade one.

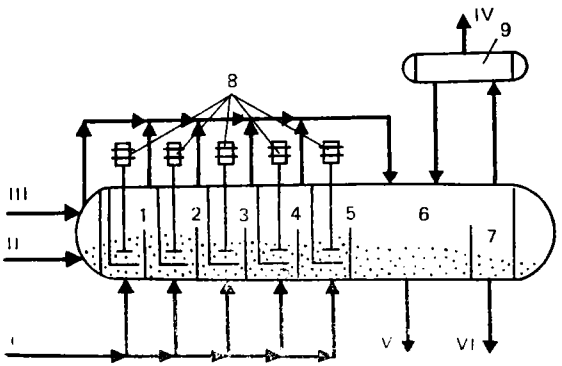

Fig. 79. Cascade self-cooling alkylation reactor:
1-5—reactor sections; *6, 7*—settling zones; *8*—mixing devices; *9*—separator; *I*—feed stock; *II*—fresh sulphuric acid; *III*—recirculating isobutane; *IV*—isobutane vapour to compression; *V*—sulphuric acid; *VI*—hydrocarbons to separation

Material Balance of Alkylation. The material balance (in %) in the processing of the butane-butylene fraction of catalytic cracking (I) and a mixture of the butane-butylene and propane-propylene fractions produced from gases of catalytic cracking, thermal cracking, and coking (II) is given below:

Feed Stock		
Butane-butylene fraction	100.0	54.4
Propane-propylene fraction	—	29.7
Isobutane	—	15.9
Total	100.0	100.0
Products		
Light alkylate	78.1	68.5
Heavy alkylate	3.4	5.9
Propane	2.1	14.0
Butane-pentane fraction	14.4	9.6
Losses	2.0	2.0
Total	100.0	100.0

8.3.3. Hydrogen Fluoride Alkylation

Practically anhydrous liquid hydrofluoric acid is used as the catalyst in plants of this type. In the presence of this catalyst, alkylation proceeds without any side reactions even when the temperature is elevated by 20-40 °C. The process is conducted without artificial cooling. The merits of hydrofluoric acid as a catalyst of the process include the easiness of forming an emulsion with hydrocarbons and the considerably higher solubility of isobutane in it.

The catalyst activity is optimal when it contains not over 1.5% of water and not over 12% of organic polymers. To maintain the activity at the required level, part of the catalyst is withdrawn for regeneration. The consumption of hydrogen fluoride is up to 0.14 kilogramme per tonne of alkylate.

Because of its high toxicity and volatility, the use of hydrofluoric acid as a catalyst requires the strict observance of the safety rules. Special materials have to be used for the equipment, and the points of possible leakage of the hydrogen fluoride must be constantly monitored.

8.4. Polymerization (Oligomerization) of Alkenes

8.4.1. Mechanism and Catalysts of Process

The reaction of formation of high-molecular substances by the combination of several molecules of low-molecular compounds not attended by the separation of by-products is called **polymerization.** Compounds having double or triple bonds such as alkenes and alkadienes can enter into a polymerization reaction. A restricted polymerization reaction with the obtaining of liquid products with a relatively low molecular mass is known as **oligomerization,** and the compounds formed are called **oligomers.** The petroleum refining industry employs reactions of oligomerization of propylene and butylene to produce high-octane components of motor gasoline and stock for the production of additives to oils and of synthetic detergents.

Thermal and thermocatalytic processes are used to oligomerize alkenes. Shortcomings of the thermal process conducted at 480-550 °C and 10.0-13.5 MPa are its low selectivity and high gas formation. Catalytic oligomerization is more popular. The process follows a carbonium ion mechanism and has the following stages (using propylene as an example):

(1) protolysis of the alkene on a catalyst:

$$CH_2{=}CH{-}CH_3 + HA \rightarrow (CH_3\overset{+}{C}HCH_3)\,A^-$$

(2) attachment of the formed ion to an alkene molecule to form a hexyl ion:

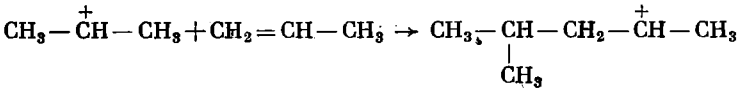

The hexyl ion can attach a few more alkene molecules to form C_9 and C_{12} ions;

(3) isomerization of the ions—the transformation of the secondary carbonium ions into more stable tertiary ones:

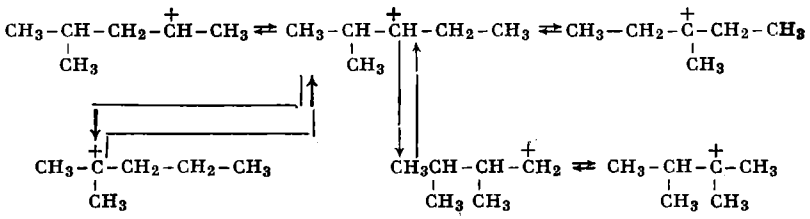

The C_9 and C_{12} ions also isomerize, but then they easily decompose to form products in which the number of carbon atoms is not a multiple of three;

(4) the transfer of a proton from the carbonium ion to the catalyst or initial alkene.

The catalysts employed in propylene and butylene oligomerization plants are (a) what is called solid phosphoric acid prepared by impregnating a diatomaceous earth powder with an orthophosphoric acid solution and containing 59-62% of free P_2O_5; and (b) liquid phosphoric acid on quartz—quartz sand which an acid film has been applied to.

8.4.2. Propylene and Butylene Polymerization (Oligomerization) Plant

Feed Stock and Commercial Products. The propane-propylene and butane-butylene fractions are the stock of oligomerization plants. The propane-propylene fraction is oligomerized in one of two variants: (1) with the production of polymer gasoline as the target product, and (2) with the production of raw materials for the petrochemical industry, namely, trimers (the C_9 fraction) and tetramers (the C_{12} fraction) of propylene. Polymer gasoline contains 93-95% of alkenes characterized by a high octane number (96-97 by the research method) and a low chemical stability. Polymerization of the butane-butylene fraction yields isooctylene which is then hydrogenated and transformed into technical isooctane (2,2,4-trimethylpentane).

Process Parameters. The temperature of the process must not be too low because already at 130 °C and lower, a reaction of formation

of ester phosphates will occur instead of polymerization. Too great elevation of the temperature leads to decomposition of the polymer carbonium ions and also to the proceeding of conjugate polymerization reactions in which alkadienes form in addition to alkenes. Polymerization of the alkadienes deactivates the catalyst. Temperatures from 160 to 230 °C are considered to be optimal.

An increase in the pressure retains the oligomerization products in the liquid phase. Under industrial conditions, the pressure is 6-8 MPa.

Flow Diagram. Figure 80 presents a flow diagram of a propane-propylene fraction polymerization plant. The stock is fed through

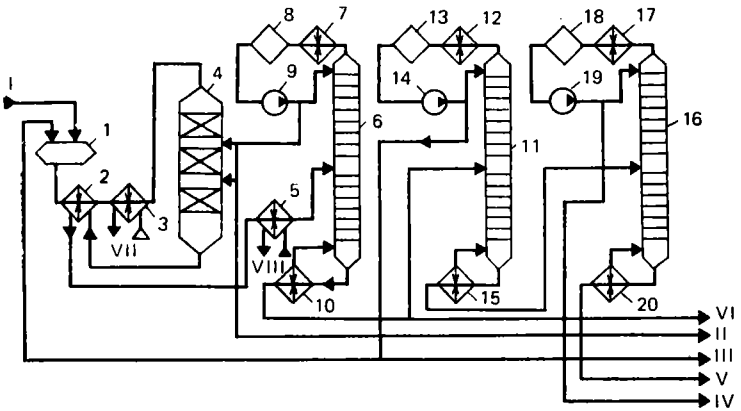

Fig. 80. Flow diagram of a polymerization (oligomerization) plant:
1, 8, 13, 18—tanks; *2*—heat exchanger; *3*—heater; *4*—reactor; *5*—cooler; *6, 11, 16*—columns; *7, 12, 17*—condensers and coolers; *9, 14, 19*—pumps; *10, 15, 20*—boilers; *I*—feed stock; *II*—spent propane-propylene fraction; *III*—IBP-175 °C fraction (dimers and trimers); *IV*—175-260 °C fraction (tetramers); *V*—heavy polymers; *VI*—polymer gasoline; *VII*—steam; *VIII*—water

exchanger *2* and heater *3* into reactor *4* consisting of several vertical sections filled with the catalyst. The products from reactor *4* are directed through exchanger *2* and cooler *5* into depropanizer column *6* whose overhead product is the spent propane-propylene fraction. Part of the latter is used as a coolant in reactor *4*, while the remainder is withdrawn from the plant. The bottom product of column *6* is a polymerisate which is also withdrawn from the plant if the latter is operating under conditions of producing motor gasoline. When a petrochemical raw material is being produced, the polymerisate is separated in columns *11* and *12* into narrow fractions: dimers, trimers, and tetramers.

8.5. Isomerization of Light Alkanes

8.5.1. Mechanism and Catalysts of the Process

The reaction of isomerization of alkanes is used at present at petroleum refineries and petrochemical enterprises to produce valuable isocomponents from normal hydrocarbons.

The following isomerization processes have been mastered on an industrial scale: (1) butane into isobutane—a stock for alkylation plants; (2) pentane into isopentane, the latter is then dehydrogenated to produce isoprene—a raw material for the production of synthetic rubber; and (3) isomerization of the pentane-hexane fraction to obtain a high-octane gasoline component.

The intramolecular chemical reactions of structural isomerization for the low-molecular C_4-C_6 alkanes can proceed in the following directions:

(a) the transformation of normal hydrocarbons into branched-chain ones:

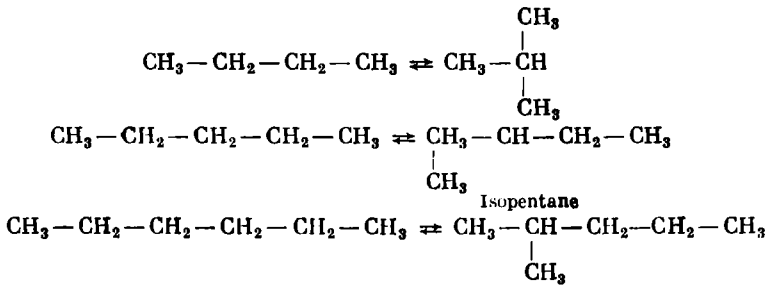

(b) migration of a methyl radical along the carbon chain:

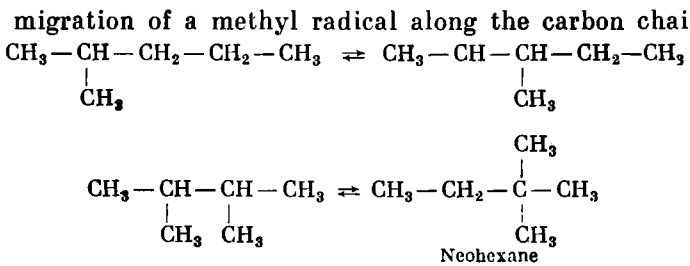

(c) a change in the number of methyl radicals in the side chains of branched-chain hydrocarbons:

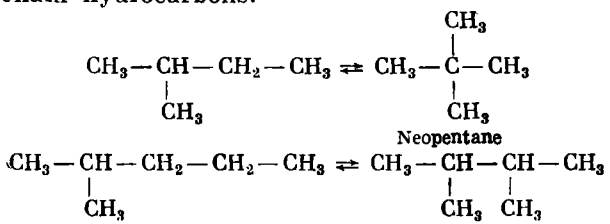

All these reactions are reversible, consequently the equilibrium concentrations of the isomers in a mixture depend first of all on the temperature of the process.

Thermodynamic studies of isomerization reactions of normal alkanes show that their transformations into branched structures are most probable at comparatively low temperatures (for butane, not over 100 °C, and for pentane, not over 150 °C), but the reaction rates at these temperatures are extremely low. This is why it is necessary to use active catalysts.

Aluminium chloride is the most active catalyst of isomerization at low temperatures. But this catalyst is insufficiently selective, causes a number of side processes, including cracking and hydrogen disproportionation, and is also very corrosive.

Bifunctional catalysts containing platinum or palladium on alumina have come into use in the industry for isomerization processes. Their basic merit is a good selectivity. But to achieve the required extent of isomerization, the temperature of the processes sometimes has to be raised to 300-400 °C and higher. To prevent the decomposition of the hydrocarbons and the deposition of coke on the catalyst at these temperatures, the isomerization processes are conducted in the presence of hydrogen and under an overall pressure up to 3-4 MPa.

A number of Soviet enterprises operate plants for the high-temperature isomerization of pentane and the pentane-hexane fraction on the catalyst ИП-62. The latter is fluorinated alumina onto which platinum is applied. A hydrogen-containing gas from platforming plants circulates in the process. Since the degree of conversion of the stock during one pass is 50-55%, the isomerizate is recirculated. The yield of isopentane relative to the transformed pentane is 96%.

In addition to the target reaction of structural isomerization, partial cracking of the pentane and isopentane, hydrofining, and desulphurizing of the stock and isomerizate also occur on the given catalyst. The yield of the decomposition products does not exceed 2%, however.

A substantially higher degree of conversion can be achieved if the process is conducted at 100-150 °C. Moreover, at low temperatures, the degree of conversion of *n*-hexane into high-octane isomers—dimethylbutanes—increases noticeably. This expands the feed stock resources by isomerization of the IBP-70 °C fraction including hexanes in addition to pentanes. The catalyst НИП-82 has been developed that will underly the design of low-temperature isomerization plants.

The mechanism of the catalytic isomerization reactions is similar to that of the transformations of hydrocarbons in catalytic cracking and the catalytic alkylation of isobutane by alkenes. In all these processes, the chain of chemical reactions is initiated by a hydrogen

ion (proton) of an acidic catalyst. Propagation of the chain, on the other hand, is associated with diverse transformations of the intermediate very active carbonium ions or, as they are also called, carbcations. The mechanism of alkane isomerization on bifunctional catalysts is distinguished by the fact that the metal component of the catalyst first causes the initial alkanes to dehydrogenate to alkenes. The latter under the influence of the acid component of the catalyst undergo structural isomerization that follows a carbonium ion mechanism. In the terminating stage of the chain reaction, the isoalkenes are saturated with hydrogen and form a mixture of isoalkanes.

8.5.2. Plant for Pentane-Hexane Fraction Isomerization

Feed Stock. The light IBP-62 °C straight-run fraction separated in the secondary distillation of gasolines is used as the stock in isomerization plants intended for the production of a component of

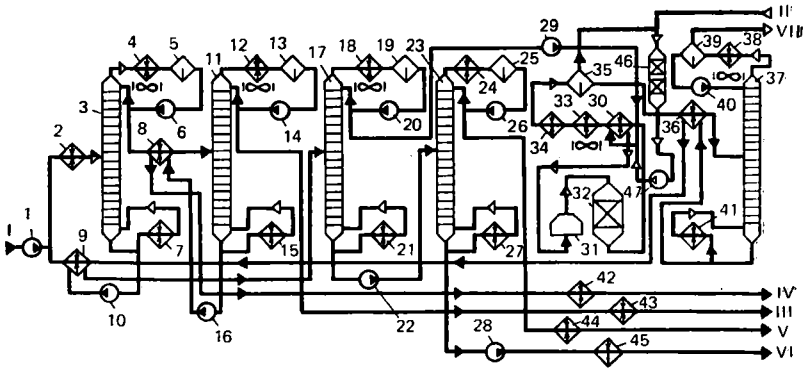

Fig. 81. Flow diagram of isomerization plant:

1, 6, 10, 14, 16, 20, 22-26, 28, 29, 40—pumps; *2*—heater; *3, 11, 17, 23, 37*—columns; *4, 12, 18, 24, 38*—condensers and coolers; *5, 13, 19, 25, 39*—tanks; *7, 15, 21, 27, 41*—boilers; *8, 9, 30, 36*—heat exchangers; *31*—furnace; *32*—reactor; *33, 34, 42-45*—coolers; *35*—separator; *46*—adsorber; *47*—compressor; *I*—feed stock; *II*—fresh hydrogen-containing gas; *III*—butanes; *IV*—isopentane; *V*—isohexane; *VI*—hexane; *VII*—hydrocarbon gas

high-octane gasoline. This fraction contains 65-70% of pentanes, including 35-45% of *n*-pentane, 20-25% of isohexanes, and also butanes and hexane.

Commercial Products. The isopentane and isohexane fractions are the commercial products. The octane number of the isopentane fraction is 89 (by the motor method, without TEL), and of the isohexane fraction containing not over 1% of hexane is 78. The plant also separates the butane and hexane fractions and a hydrocarbon gas.

Flow Diagram (Fig. 81). An isomerization plant consists of two units—rectification and isomerization ones. The former is intended

for separating the commercial products—the isopentane and isohexane fractions—from the mixture of stock and isomerizate, removing C_4 and lower hydrocarbons from the stock, and for preparing the stock of the isomerization unit—the pentane fraction, for processing. In the isomerization unit, the pentane is transformed into isopentane.

The fresh stock fed into the rectification unit is mixed with the stable isomerizate. The mixture is separated in isopentane column *3* into the overhead product—a mixture of isopentane and butane, and the bottom product—a mixture of *n*-pentane and hexanes. In column *11*, the rectificate of column *3* is separated into butanes and isopentane. In column *17*, the residue of column *3* is divided into the *n*-pentane fraction fed to the isomerization unit and a mixture of hexanes fed into column *23*. In the latter, the mixture of hexanes is separated into isohexane and *n*-hexane.

The overhead products of the rectification columns are condensed and cooled in air condensers and coolers; heat is supplied to the bottom part of the columns through steam-heated boilers.

The pentane fraction fed to the isomerization unit is picked up by pump *29* and delivered for mixing with the hydrogen-containing gas. The mixture of the stock and gas is heated in exchanger *30* and furnace *31* to the reaction temperature and flows into reactor *32*, where an isomerization reaction occurs in the presence of an alumino-platinum catalyst.

The gas and product mixture leaving the reactor is cooled in heat exchangers and coolers, after which it is directed for separation into product separator *35*. The circulating hydrogen-containing gas is withdrawn from separator *35*. It is mixed with fresh hydrogen-containing gas, is dried by zeolites in adsorber *46*, and is fed into the intake line of circulation compressor *47*. The compressed hydrogen-containing gas is mixed with the stock.

The unstable isomerizate from separator *35* is heated to 85-90 °C in exchanger *36* and flows into stabilizer column *37*. A rich gas emerges from the top of column *37*, and a stable isomerizate is withdrawn from its bottom and is directed to the rectification unit.

Once in five or six months, the isomerization catalyst is subjected to oxidizing regeneration. This is done in the same way as in platforming plants (see Sec. 7.8).

Technological Conditions. These conditions are as follows:

Rectification Unit

Temperature, °C:	
at top of column *3*	77
at bottom of column *3*	110
at top of column *11*	55
at bottom of column *11*	100
at top of column *17*	74
at bottom of column *17*	110

Isomerization Unit

Temperature, °C:	
of reaction:	
at beginning of cycle	380
at end of cycle	450
at top of column *37*	82
at bottom of column *37*	112

Pressure, MPa:	
in column *3*	0.6
in column *11*	0.7
in column *17*	0.6
Pressure, MPa:	
in reactor *32*	3.5
in stabilizer column *37*	0.85
Volume rate of stock feed, h^{-1}	1.5
Degree of pentane conversion during one pass, %	50

Material Balance. The material balance of a plant when processing the IBP-62 °C fraction of Romashkino petroleum is as follows:

Feed Stock		*Products*	
IBP-62 °C fraction	100	Hydrocarbon gas	1.6
Hydrogen-containing gas	0.8	Butanes	15.3
including 100% hydrogen	(0.22)	Isopentane	53.4
		Isohexane	22.1
		Hexane	6.9
		Losses	1.5
Total	100.8	Total	100.8

Chapter 9

DEWAXING AND TREATMENT OF LIGHT PETROLEUM PRODUCTS

9.1. Carbamide Dewaxing of Diesel Fuels

By **dewaxing** is meant the process of separation from petroleum fractions of solid hydrocarbons that precipitate in the form of crystals when the fraction is cooled. As regards their group composition, they can be high-molecular alkanes (paraffins), and also cycloalkanes, arenes, and cycloalkanoarenes with long side aliphatic radicals of a normal and slightly branched-chain structure.

The diesel fractions of paraffinic petroleum contain a substantial amount of normal alkanes, owing to which they have a comparatively high pour point (—10 to —11 °C). To produce diesel winter fuel with a pour point of —45 °C and diesel Arctic fuel with a pour point of —60 °C from these fractions, they are dewaxed.

The low-melting alkanes separated from diesel fuel are a valuable product of petroleum refining that is subsequently used to produce protein and vitamin concentrates by microbiological techniques.

Carbamide dewaxing is one of the ways of separating diesel fuel from alkanes.

Carbamide (urea) $(NH_2)_2CO$ is a white hygroscopic crystalline substance readily soluble in water and lower alcohols that melts at 132.5 °C. When heated with water in an alkaline medium, carbamide

decomposes into carbon dioxide and ammonia. It can form crystalline complexes with normal alkanes with at least six carbon atoms (see Sec. 2.1). Hydrocarbons with a hybrid structure whose molecules contain long unbranched aliphatic radicals also form carbamide complexes. The ability of hydrocarbons to form complexes and the stability of the complexes grow with an increase in the length of the unbranched chain of an aliphatic hydrocarbon. The formation of a complex is attended by the evolution of heat whose amount increases with the molecular mass of the hydrocarbons.

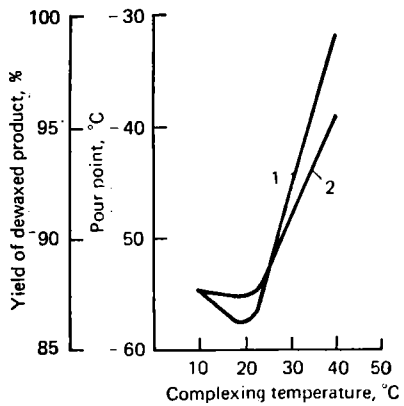

Fig. 82. Pour point (*1*) and yield (*2*) of dewaxed product against the complexing temperature

The formation of a complex follows the scheme:

$$\text{Alkane} + \text{Carbamide} \rightleftharpoons \text{Complex}$$

For every hydrocarbon, there is an upper temperature limit above which its complex with carbamide decomposes. Hence, for the more complete extraction of alkanes, the process of complexing should be conducted at reduced temperatures.

How the yield and pour point of dewaxed diesel fuel depend on the complexing temperature is shown in Fig. 82. Above 20 °C, the pour point of diesel fuel and its yield increase, which indicates incomplete complexing.

The carbamide-to-stock ratio also affects the course of the process. The optimal value of this ratio for diesel fuels is 1:1.

The completeness of complexing depends on the proper contact between the diesel fuel and carbamide. Solvents in which both normal alkanes and carbamide dissolve well are employed to reduce the viscosity and improve the contact. Isopropanol and isobutanol are the most popular ones. A shortcoming of the solvent is partial decomposition of the complex, which increases the consumption of carbamide.

Substances called activators greatly affect the intensity of complexing. They include methanol and acetone, and must always contain a certain amount of water. An excess amount of the activator detracts from complexing because it shifts equilibrium to the left. The activator and its amount are selected experimentally.

The degree of extraction of alkanes also depends on the duration of contact between the stock and carbamide solution. The duration of contact grows with elevation of the boiling point and an increase in the viscosity of the petroleum fraction. For diesel fuel under con-

ditions of intensive agitation, the complexing process terminates in about 30-40 minutes. The purity of the employed carbamide is a must for the successful conducting of the process. Insignificant impurities encountered in technical carbamide make it unsuitable.

At present, several flow diagrams are used for the dewaxing of diesel fuel with carbamide. Examples are dewaxing with crystalline carbamide and in an alcohol and aqueous solution of carbamide. The main stages of the process are the formation of a carbamide complex, its separation, scrubbing, and destruction.

Complex formation, requiring close contact between the carbamide and diesel fuel, is conducted either in a mixer or in a tubular reactor with forced agitation by means of pumps. The reacting mixture is cooled with water. The use of low-boiling solvents such as methylene chloride (boiling point 41 °C) or isobutanol mixed with butane makes it possible to remove heat from the reactor at the expense of partial solvent evaporation.

The complex is separated from the dewaxed product by settling, filtration, or centrifuging.

The crude complex, which is a white creamy product, entrains a certain amount of diesel fuel. When the complex is decomposed, this fuel gets into the paraffin wax and makes it unfit for further use. Therefore, the stage of scrubbing the crude complex with ligroin (boiling range 180-220 °C) is introduced. The scrubbing is generally performed in two or three steps, the consumption of ligroin being from 40 to 140% of the stock.

The scrubbed complex decomposes when heated to 70-75 °C. The free carbamide dissolves in the aqueous medium, while the paraffin waxes settle.

Flow Diagram. A diagram of diesel fuel dewaxing with an alcohol and aqueous solution of carbamide is shown in Fig. 83.

The dewaxed diesel fuel is fed by stock pump *17* through cooler *16* into reactor *1*. This stock is preliminarily mixed with an alcohol solution of carbamide supplied by pump *22* from tank *23*. For intensive mixing of the diesel fuel with the carbamide solution and cooling of the mixture, the reaction is conducted consecutively in three steps in reactors *1*, *2*, and *3*, part of the substance circulating through coolers *16*, *18*, and *20*.

From reactor *3*, the carbamide complex and the dewaxed diesel fuel flow into settling tank *4*, where they divide into two layers. The upper one is dewaxed diesel fuel, and the lower one is a mixture of an alcohol carbamide solution and the crystalline complex. The dewaxed diesel fuel is discharged from the plant by pump *5*. The mixture of the carbamide solution and crystalline complex is scrubbed three times with ligroin to remove the diesel fuel residues (one scrubbing step is shown in the diagram). The carbamide solution from the bottom of settling tank *4* is fed into mixer *7*, where

it comes into contact with the ligroin flowing in from the delivery line of pump *15*. In settling tank *8*, the mixture is separated into a gasoline layer with the extracted diesel fuel and the scrubbed carbamide solution containing the crystalline complex. The carbamide solution is directed by pump *25* into steam heater *24*. Here the complex decomposes. The liquid paraffin waxes and carbamide separate in the free form. The alcohol carbamide solution is thus regenerated.

The liquid paraffin waxes settle from the carbamide solution in heated tank *23*. From the top part of tank *23*, they flow into tank *26*,

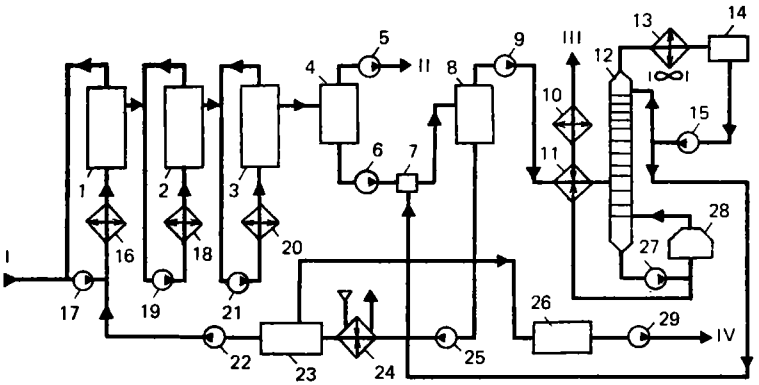

Fig. 83. Flow diagram of plant for the dewaxing of diesel fuel with an alcohol and aqueous solution of carbamide:

1-3—reactors; *4*, *8*, *23*—settling tanks; *5*, *6*, *9*, *15*, *17*, *19*, *21*, *22*, *25*, *27*, *29*—pumps; *7*—jet mixer; *10*, *13*, *16*, *18*, *20*—coolers; *11*—heat exchanger; *12*—column; *14*, *26*—tanks; *24*—steam heater; *28*—furnace; *I*—feed stock; *II*—winter diesel fuel; *III*—component of summer diesel fuel; *IV*—liquid alkanes

while the alcohol carbamide solution is recycled for mixing with the feed stock. Ligroin from tank *8* is fed by pump *9* through exchanger *11* into column *12*, where it is distilled off from the diesel fuel. The distilled off ligroin is again used for scrubbing the complex, while the diesel fuel is withdrawn from the plant and can be used as an addition to summer diesel fuel. The basic parameters of the technological process are:

Complexing temperature, °C	20-30
Temperature after heater *24*, °C	75
Duration of contact in reactors *1*, *2*, and *3* . .	30-50
Solution-to-stock mass ratio	4.2:1
Content of carbamide in solution, %	38-43
Concentration of isopropyl alcohol, % . . .	62-68

The successful conducting of the process depends on the careful monitoring of the temperature and especially on the ratio of the carbamide, stock, activators, and solvents. This is why great atten-

tion is given to the periodical laboratory control of the quality of the stock, carbamide, and intermediate solutions.

The main trouble that may appear in operation is clogging of the cooler pipes and complex pipelines by the crystalline complex because the latter has a high adhesion to metals. The cooler pipes are washed with hot water, while the complex pipelines are lined with polytetrafluoroethylene.

Material Balance. Below is given the material balance (in %) of the carbamide dewaxing of diesel fuel to produce diesel winter fuel with a pour point of —45 °C (I) and diesel Arctic fuel with a pour point of —60 °C (II):

	I	II
Feed		
Stock:		
200-350 °C fraction	100	—
200-320 °C fraction	—	100
Total	100	100
Products		
Dewaxed diesel fuel	85.0	82.6
Paraffin wax	14.1	16.5
Losses	0.9	0.9
Total	100.0	100.0

Safety Rules. The isopropanol, gasoline, and methanol employed in a plant are toxic and explosive substances. Therefore, all the substances discharged from the apparatus are directed into special scrubbers in which water is sprayed to trap the isopropanol, which is recycled to the process. The effluents from the plant are drained into a special tank.

Technical and Economical Indices. The approximate technical and economical indices per tonne of winter diesel fuel are as follows:

Steam, kg:	Circulation water, m^3	34.1
$P = 1.2$ MPa . . .107	Electrical energy, kW h	41.2
$P = 0.3$ MPa . . .125	Fuel (gas), kg	49.3

9.2. Extraction of Liquid Alkanes by Adsorption on Molecular Sieves

During the last 20 years, the adsorption method of extracting liquid alkanes from kerosene and gas oil fractions has found widespread application. The method is based on the use of new industrial adsorbents—synthetic zeolites. General information on zeolites is given in Sec. 7.2. The zeolites CaA and MgA are employed for the adsorption extraction of normal alkanes. In these zeolites, the diameter of the inlet "openings" (pores) is about 0.5 nm. Molecules

of *n*-alkanes whose critical diameter does not exceed 0.49 nm penetrate through openings of such a size. The critical diameter of isoalkane, cycloalkane, and arene molecules is 0.57-0.72 nm, and therefore they cannot penetrate into the cavities of zeolites.

The adsorption of *n*-alkanes by synthetic zeolites is due to the forces of intermolecular interaction: *n*-alkanes, which have only sigma bonds in their structure, are adsorbed in the cavities of zeolites at the expense of the high adsorption potentials created by overlapping of the adsorption fields of the opposite walls of the zeolite cavities.

The technological process of the adsorption separation of *n*-alkanes includes the following stages: adsorption of the *n*-alkanes by the zeolite when it comes into contact with the stock, purging—the removal from the adsorption space of the stock components not adsorbed by the zeolite, and desorption—the removal of the *n*-alkanes from the zeolite cavities with the aid of displacers.

A number of industrial processes have been developed for separating liquid *n*-alkanes from kerosene and gas oil fractions. They differ in the characteristics of the zeolite used, the type of displacer, and the operating conditions of the process. Several plants of the "Parex" type have been erected in the USSR for extracting liquid alkanes. The 200-320 °C fraction is the stock of the plant. It is preliminarily subjected to deep hydrofining to prevent the proceeding of cracking and polymerization reactions on the zeolites. Ammonia is used as the displacer. The process is conducted in the presence of a hydrogen-containing gas to improve the conditions of heat exchange and suppress the cracking and polymerization reactions.

Continuity of the process is achieved by the consecutive connection of three adsorbers in which all the process stages are carried out alternately. The adsorbers are switched over automatically by means of programmed rapid-action shutoff valves. Desorption lasts longer than adsorption, therefore adsorption is generally conducted in one adsorber, while desorption and purging are performed in the other two.

Flow Diagram. A diagram of a "Parex" plant for the adsorption extraction of alkanes is shown in Fig. 84.

The stock is fed by pump *1* through exchangers *2* and *3*, is combined with the scrubbing products, and is mixed with a fresh and circulating carrier gas (hydrogen-containing gas). Next the mixture is heated in exchanger *4*, and also in furnace *5*, and in the vapour form flows into the one of the three adsorbers *6* that at the given instant is in the adsorption stage (adsorber *6/2* in the diagram).

In the adsorber, molecular sieves absorb *n*-alkanes from the stock and evolve the ammonia that was adsorbed by the sieves in the preceding desorption stage. The mixture of the denormalizate, carrier

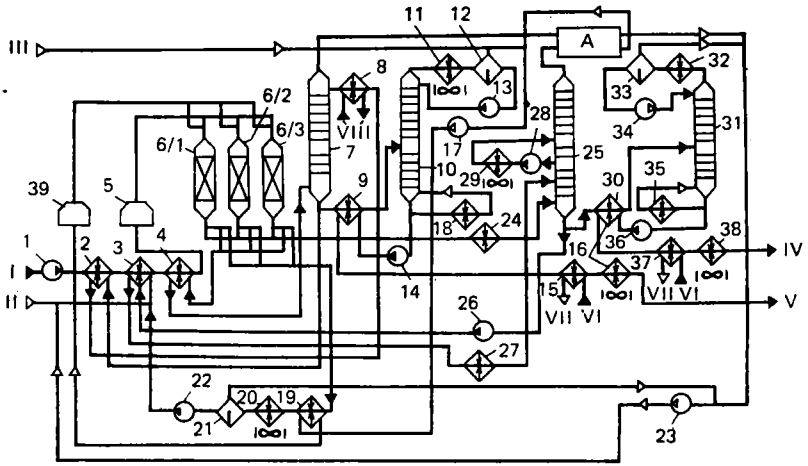

Fig. 84. Flow diagram of "Parex" plant for the adsorption extraction of paraffin waxes:

1, 13, 14, 22, 26, 28, 34, 36—pumps; *2, 3, 4, 9, 15, 19, 24, 30, 37*—heat exchangers; *5, 39*—furnaces; *6*—adsorbers; *7, 10, 25, 31*—columns; *8, 16, 20, 27, 29, 32, 38*—coolers; *11*—condenser and cooler; *12, 21, 33*—tanks; *17, 23*—compressors; *18, 35*—boilers; *A*—treatment and final purification unit; *I*—feed stock; *II*—fresh hydrogen-containing gas; *III*—fresh ammonia; *IV*—paraffin waxes (desorbate); *V*—denormalizate; *VI*—condensate; *VII*—steam; *VIII*—circulation water

gas, and ammonia leaving the adsorber is cooled in exchanger *4* and denormalizate cooling column *7*. The denormalizate leaving the bottom of the cooling column is partly recycled via exchanger *2* and cooler *8* to column *7*, while the remaining amount is heated in exchanger *9* and is fed into stabilizer column *10*. The stable denormalizate through exchanger *9*, waste-heat utilizing exchanger *15* and cooler *16* is withdrawn from the plant.

A mixture of the denormalizate, ammonia, and the carrier gas emerges from the top of stabilizer column *10*. After condensation and cooling, the product gathers in tank *12*. The liquid part of the flow is delivered by pump *13* to the stabilizer column as a reflux, while the gas is picked up by compressor *17*.

While one of the adsorbers is in the adsorption stage, the second one is purged with ammonia. In the purging stage, the feed stock hydrocarbons capable of contaminating the adsorbed alkanes are blown away from the surface of the molecular sieves. The mixture of scrubbing product, ammonia, and carrier gas is cooled in exchanger *19* and cooler *20* and is then separated in tank *21*. The liquid scrubbing product from tank *21* is fed by pump *22* for mixing with the stock, while the gas is picked up by compressor *23* and is also directed for mixing with the stock.

The desorption stage is conducted in the third adsorber at this time (adsorber *6/3* in the diagram). During desorption, the alkanes (desorbate) are displaced by ammonia from the pores of the molecular sieves. The mixture of desorbate, ammonia, and the carrier gas is cooled in exchanger *24* and flows into desorbate cooling column *25*. Here the desorbate is cooled and condenses, and it is separated from the gases. Cooling is performed by two refluxes—the bottom reflux is fed by pump *26* through feed stock exchanger *3* and cooler *27*, and the top one is fed through cooler *29*.

The desorbate from the bottom of cooling column *25* is fed via exchanger *30* into desorbate stabilizer column *31*. The stable desorbate from the bottom of column *31* is discharged into the sulphuric-acid purifying section through exchangers *30* and *37* and cooler *38*. The mixture of desorbate, ammonia, and water withdrawn from the top of column *31* is cooled in cooler *32* and flows into tank *33*. The liquid phase from tank *33* is employed as a reflux, while the ammonia gas is picked up by compressor *23*.

The carrier gas mixed with ammonia is discharged from the top of denormalizate cooling column *7*. After being scrubbed from ammonia in the gas-preparing unit, the carrier gas is combined with fresh hydrogen-containing gas and is delivered for mixing with the feed stock of the plant. Ammonia with a certain content of desorbate and water is withdrawn from the top of desorbate cooling column *25*. After purification, the ammonia is fed to compressor *17* for compression. The compressed ammonia is heated in exchanger *19* and furnace *39*, and is then supplied as a desorbent into adsorbers *6*.

The basic parameters of the technological process are as follows:

Adsorption temperature, °C	380
Pressure in adsorbers, MPa	1.04
Duration of stages, min:	
adsorption	5
scrubbing	1
desorption	10

Material Balance. The process of adsorption extraction of alkanes makes it possible to obtain a product containing up to 99% of *n*-alkanes. The yield of *n*-alkanes is 95-98% (mass) of the potential, i.e. it is considerably higher than in carbamide dewaxing. Below is given the material balance (in %) of a "Parex" plant processing feed stock containing 21% of *n*-alkanes:

Feed	
Stock—hydrofined 200-320 °C fraction	100.0
Products	
Liquid paraffin wax	18.0
Denormalizate (low pour point diesel fuel)	81.0
Losses	1.0
Total	100.0

9.3. Treatment of Light Distillates

The light distillates (gasoline, kerosene, and diesel fractions) produced by primary distillation and secondary processes of petroleum refining are not commercial products in the majority of cases because they contain components detracting from their service properties. These components are removed from the petroleum fractions by purification treatment. The main ways of treatment are characterized below.

1. Distillates produced in the primary distillation of some petroleums contain petroleum acids, phenols and other oxygen-containing compounds having a harmful corrosive effect. These compounds are removed by alkaline treatment.

2. The sulphur-containing compounds present in all the products of refining sour petroleums have a high corrosive activity. These components are removed by alkaline treatment, the oxidizing removal of mercaptans, and also by hydrogenization (see Chap. 7).

3. The gasolines produced in cracking and pyrolysis contain alkadienes and unsaturated cyclic compounds that readily polymerize to form gums. Acid, adsorption, and catalytic methods of treatment are employed to remove these compounds.

4. In the production of solvent gasolines, burning oils, and highly pure liquid paraffin waxes, which are a raw material of the biochemical industry, it is necessary to practically completely remove all traces of arenes. Acid and adsorption methods as well as selective solvents are employed for this purpose.

Alkaline Treatment. Generally a solution of caustic soda NaOH or calcined soda Na_2CO_3 is used to remove hydrogen sulphide. The latter reacts with the alkali by the equations:

$$2NaOH + H_2S \rightarrow Na_2S + 2H_2O$$
$$NaOH + H_2S \rightarrow NaHS + H_2O$$

Mercaptans are removed with the aid of caustic soda. Here a reaction of mercaptide formation occurs:

$$RSH + NaOH \rightleftarrows RSNa + H_2O$$

Mercaptides dissolve well in the alkali and can therefore be removed from the distillates. The removal of mercaptans in the form of mercaptides is prevented by hydrolysis of the latter.

Petroleum acids form salts called soaps with an alkali or soda:

$$RCOOH + NaOH \rightarrow RCOONa + H_2O$$
$$2RCOOH + Na_2CO_3 \rightarrow 2RCOONa + CO_2 + H_2O$$

These salts pass into the aqueous alkali solution and are thus easily separated from the petroleum product.

Generally a 10% NaOH solution is employed for the alkaline treatment of light-end petroleum products. The treatment temperature is 40-50 °C. Elevation of the temperature diminishes the danger of formation of aqueous emulsions and facilitates the settling of the product from the alkaline solution. Alkali traces are removed from the petroleum product by washing with water.

The consumption of alkali depends both on the final concentration of the alkali in the spent solution and on the amount of sulphur- or oxygen-containing compounds in the product being purified. The consumption for straight-run gasoline is 0.32 kg/tonne.

The equipment for alkaline treatment and washing with water is arranged directly on the primary distillation, hydrofining, or other plant producing the distillates.

Major shortcomings of alkaline treatment are the irretrievable loss of the costly reagent and the formation of a large amount of sulphurous alkaline sewage difficult to utilize.

Acid Treatment. Sulphuric acid is employed in the petroleum-refining industry to remove harmful impurities from the petroleum fractions. Two layers form when a petroleum product is mixed with sulphuric acid and then left to stand. The upper one is the purified product, and the lower one is acid tar—the spent acid with reaction products dissolved in it.

Sulphuric acid does not react with alkanes and cycloalkanes at normal temperature. Upon prolonged contact and thorough agitation, sulphuric acid absorbs small amounts of alkanes.

Sulphuric acid forms acid and neutral esters with alkenes and alkadienes:

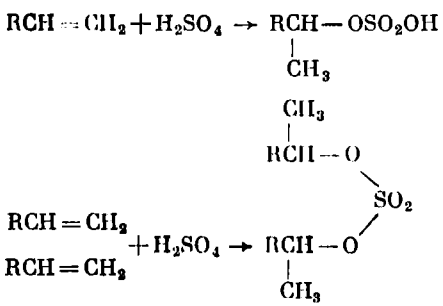

Acid esters dissolve in sulphuric acid, while the neutral ones dissolve in the product being treated, therefore the formation of neutral esters is not desirable.

In addition to these reactions, an alkene polymerization reaction proceeds. The polymers remain in the product being treated and impair the fractional composition of the gasolines. Secondary distillation is used to remove polymers from gasoline. Alkadienes and

cycloalkenes in polymerization yield high-molecular resinous substances that pass into the acid tar.

Arenes enter into a reaction only with concentrated sulphuric acid taken in an excess. The products are sulphoacids and sulphones soluble in sulphuric acid:

$$C_6H_6 + H_2SO_4 \rightarrow \underset{\text{Sulphoacid}}{C_6H_5SO_2OH} + H_2O$$

$$C_6H_6 + C_6H_5SO_2OH \rightarrow \underset{\text{Sulphone}}{(C_6H_5)_2SO_2} + H_2O$$

Petroleum acids partly dissolve in sulphuric acid and are partly sulphurized. Resinous substances generally pass completely into acid tar.

Hydrogen sulphide and mercaptans react with sulphuric acid:

$$H_2S + H_2SO_4 \rightarrow S + SO_2 + 2H_2O$$

$$2RSH + H_2SO_4 \rightarrow RS{-}SR + SO_2 + 2H_2O$$

The sulphur and disulphides remain in the product being purified. The remaining sulphur-containing compounds partially dissolve in the sulphuric acid.

Sulphuric acid with a concentration of 92-94% is used for the treatment of burning oil, and 98% acid or oleum is used to remove arenes from solvent gasolines. The temperature of sulphuric acid treatment of distillates should be as low as possible. Elevation of the temperature from 0 to 30 °C increases the losses with acid tar.

Sulphuric acid treatment has numerous shortcomings that are characterized in Sec. 10.8.

Adsorption and Catalytic Treatment of Light-End Petroleum Products. Sometimes natural clays, artificial aluminosilicates, activated carbon, and other solids are employed for the treatment of light-end petroleum products. This is based on the phenomenon of adsorption.

The adsorption activity of an adsorbent is characterized by the amount of substance absorbed. It is higher when the porosity of the adsorbent is greater, its unit surface area is larger, and the adsorbent particles are smaller. The activity of an adsorbent is improved by preliminary treatment (activation) performed by acid leaching, drying, and roasting. The roasting temperature must not exceed 400-500 °C because at a higher temperature sintering and consolidation of the adsorbent pores are possible, this resulting in deterioration of its properties.

Adsorbents are used in the form of a powder or small pellets. Powders are employed in liquid-phase treatment, the adsorbent being mixed with the product being purified. Adsorbents in the form of small pellets or granules are poured into adsorption columns, while

the petroleum product is percolated through the adsorbent layer in the liquid or vapour state.

The adsorption treatment of arenes removes unsaturated hydrocarbons and resinous and asphaltic substances. Arenes (benzene and toluene) recovered from reforming catalysts by selective solvents are treated. Natural clays activated thermally and sometimes also chemically are employed for treatment. The treatment is performed at a pressure of 2.5-3.5 MPa and a temperature of 225-230 °C. The service life of the clay is about 150 days.

Catalytic treatment of gasolines is employed to remove unsaturated hydrocarbons from gasoline fractions of a secondary origin. It is conducted in conventional catalytic cracking plants without any alterations in their layout and without replacement of the synthetic aluminosilicate catalyst. Some refineries have erected units including three catalytic cracking plants, two of which are intended for producing gasoline from the heavier fractions, and the third one, for its treating. The temperature in a catalytic treatment reactor is about 450 °C.

Chapter 10

PRODUCTION OF OILS

10.1. Fundamentals of Technology

Petroleum mineral oils of the most diverse applications are produced from the residues of atmospheric distillation—fuel oils (mazuts). The process of producing any lubricating or special oils consists of three stages:

(1) preparation of the feed stock—production of the initial oil fractions;

(2) production of the components from the initial oil fractions;

(3) blending of the components (compounding) and incorporation of additives for producing commercial grades of oils.

Preparation of the feed stock consists in vacuum distillation of the fuel oils (see Secs. 5.1 and 5.2). The fractions used for the production of oils are divided into two groups depending on how they are obtained, namely, distillate fractions separated in the form of cuts in the vacuum distillation of fuel oil (300-400, 350-420, 420-450 °C) and residual fractions obtained from the distillation residues, i.e. tar. Accordingly, the oils produced in processing the distillate oil fractions are called distillate oils, and those produced from tar, residue oils.

The production of components from the initial oil fractions is an involved multiple-stage process. The main designation of each stage

is the complete or partial removal of definite groups of compounds adversely affecting the service properties of the oils. The petroleum fractions must be freed of all acid compounds, unsaturated hydrocarbons, partly of sulphur-containing and resinous compounds, polycyclic arenes with short side chains, and solid alkanes.

The removal of resinous substances from lubricating oil fractions changes their colour—they become lighter. The removal of resinous substances and polycyclic arenes with short side chains lowers the carbon residue and improves the viscosity index of the oils. The removal of resinous substances and unsaturated hydrocarbons substantially increases the thermal and oxidation stability. The purification from acid compounds lowers the corrosive activity, while the separation of solid hydrocarbons from oils lowers their pour point. It is the achievement of the required quality indices of oils and the yield of the target product that characterize the efficiency of oil production processes.

In the USSR, oils were produced for a long time only from Baku and Groznyĭ petroleums. In the 1950's, additional raw material resources for the production of oils became urgently necessary. The result was the setting up of new facilities for oil production at refineries of the Tatar and Bashkir ASSR. In the 1950-1960's, very large refineries producing oils from Romashkino and other petroleums of the eastern regions. were erected. Now oils are also being produced from Mangyshlak, Ust-Balyk, and Samotlor petroleums.

The petroleums of the eastern regions and of West Siberia differ from the Baku and Groznyĭ ones in their high content of sulphur, resins, asphaltenes, and solid hydrocarbons. Therefore the technology of producing commercial oils from such petroleums is considerably more involved.

In the production of oils from Baku petroleums, treatment with sulphuric acid is mainly used in combination with bleaching clay treatment. In the production of oils from resinous and paraffinic petroleums, great favour has been given to processes with selective solvents combined with adsorption treatment and hydrofining, with up to three or four treatment stages being employed.

The production of oil components from the initial oil fractions is based on methods of selective removal of the undesirable components indicated above. These methods may be physical ones—extraction by solvents and precipitation from a solution with lowering of the temperature, physicochemical ones—adsorption, and chemical ones—reaction with sulphuric acid and hydrofining.

The production of residue oils is more complicated than of distillate ones because of the high content of resinous and asphaltenic substances in the tars. The tar obtained in vacuum distillation is first of all subjected to deasphalting—removal of the resinous and asphaltenic substances. The deasphaltizate is directed for treatment with

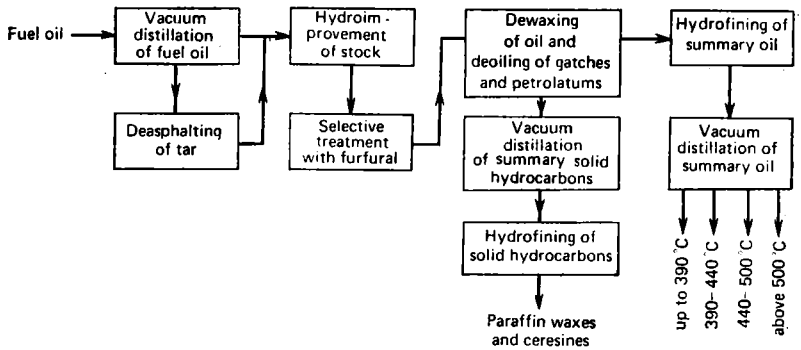

Fig. 85. Production of base oils in a combined plant KM-1/2

selective solvents (selective treatment)—phenol or furfural. The object of selective treatment is the extraction of the residual resinous and asphaltenic substances and polycyclic arenes with short side chains. (Treatment with double solvents may be employed instead of deasphalting and selective treatment.)

Solid alkanes are precipitated from the raffinate of selective treatment by such selective solvents as acetone and dichloroethane. The product of dewaxing is finally brought up to the required condition by adsorption treatment or hydrofining.

Distillate oil fractions do not generally require deasphalting. Otherwise, the general diagrams of the production of distillate and residue oils coincide.

A schematic diagram of the production of oil components from distillate and residue fractions is given on p. 406 (see Fig. 116). The same figure also shows how paraffin wax and ceresine are produced from the by-products of dewaxing.

Since hydrofining improves the efficiency of using selective solvents, modern flow diagrams of oil production include this process (Fig. 85).

The introduction of hydrocracking and hydroisomerization in the petroleum refining industry changed the flow diagram of distillate oil production somewhat. A product of hydrocracking of vacuum gas oil, namely, the 350 °C-EBP fraction, is a valuable feed stock for the production of oils and requires only dewaxing.

High-grade oils can also be produced in the hydroisomerization of paraffin waxes and gatches—by-products of the dewaxing of oils.

The basic properties of commercial oils are given in Table 12.

Oils of commercial grades are prepared by blending individual components with the incorporation of additives.

For example, Grade AC-10 oil (USSR State Standard GOST 10541-78) is a mixture of distillate and residue components with the incor-

Table 12. **Properties of Commercial Oils**

Indices	Motor oils			Industrial oils		Compressor oil КС-19
	МС-20С	ДС-11	АС-10	* И-12А	И-40А	
Kinematic viscosity, mm²/s:						
at 100 °C	At least 20.5	11±0.5	10±0.5	—	—	18-22
at 50 °C	—	—	—	10-14	35-45	—
at 0 °C, not over	—	2500	2000	—	—	—
Viscosity index, at least	92	83	85	—/95*	85/97*	92
Pour point, °C, not over	−18	−15	−15	−30	−15	−15
Density at 20 °C, g/cm³, not over	0.900	—	0.900	0.888	0.895	—
Flash point (open crucible), °C, at least	270	200	200	165/170*	200/210*	270

* For high-grade oils awarded the State Quality Mark.

poration of the additives ВНИИНП-360 and ПМС-200А; the oil ДС-11 (GOST 8581-78) is a mixture of distillate and residue components containing the additives ЦИАТИМ-339, АФБ, and ПМС-200А.

10.2. Use of Selective Solvents in Oil Treatment Processes

Oil fractions consist of a mixture of hydrocarbons of various classes and heterocyclic compounds of a diverse structure. The physical properties of the hydrocarbons depend both on the class they belong to and their molecular mass. The physical properties of heterocyclic compounds differ from those of hydrocarbons. In particular, all these compounds dissolve in a number of organic solvents differently and at different temperatures.

Sometimes solvents dissolve hydrocarbons quite well, and the undesirable components precipitate from the solution and are readily separated. This principle underlies the process of removing resinous and asphaltenic substances (deasphalting) and solid hydrocarbons (dewaxing).

In other processes, conversely, the solvents dissolve the undesirable components very well, but practically fail to dissolve the valuable components of the oil fraction. This method is employed in selective treatment with phenol and furfural. The purified prod-

Table 13. **Physical Properties of Solvents Em**

Indices	Phenol	Furfural	Propane	*m*-Cresol
Chemical formula	C_6H_5OH	C_4H_3OCHO	C_3H_8	$CH_3C_6H_4OH$
Molecular mass	94.11	96.09	44.09	108.06
Specific gravity, d_4^{20}	1.071 (25 °C)	1.1614	0.5020	1.0465
Melting point at 0.1 MPa, °C	42.0	−38.7	−187.7	11.8
Boiling point at 0.1 MPa, °C	181.4	161.7	−42.2	201.1
Solubility in water at 38 °C, %	9.5	9.0	—	2.5
Solubility of water at 38 °C, %	33.0	6.5	—	14.5
Boiling point of azeotropic mixture with water, °C	99.6	97.8	—	98.9
Solvent content in azeotropic mixture, %	9.2	35	—	6
Critical temperature, °C	—	—	96.8	—
Critical pressure, MPa	—	—	4.2	—
Specific heat capacity at 20 °C, kJ/(kg·K)	2.35	1.58	2.43*	2.09
Heat of vaporization at boiling point, kJ/(kg·K)	446	450	419	421

* At 0 °C

uct and the concentrate of undesirable components in each process have their own names. For example, in deasphalting, the clarified oil fraction is called the deasphaltizate, while the concentrate of resinous and asphaltenic substances is called asphalt. In dewaxing, the products are dewaxed oil and a concentrate of solid hydrocarbons called either gatch or petrolatum. In phenol and furfural treatment, the products are clarified oil—raffinate, and a concentrate of resinous, asphaltenic, and polycyclic arenes—extract.

The selectivity of the solvents is not ideal, i.e. a solvent dissolves one of the phases completely and the other one partly. For example, phenol dissolves polycyclic arenes very well, but also partly dissolves the hydrocarbons of the oil. Consequently, phenol has a low selectivity or a good general dissolving ability. The low selectivity results in the extract or gatch entraining valuable oil components, while the deasphaltizate contains resins and asphaltenes. In the first case, the yield of oil drops, and in the second, the quality of the deasphaltizate becomes poorer.

The addition of water, and also of benzene and toluene changes the selectivity and total dissolving ability of solvents such as phenol, furfural, dichloroethane, alcohols, and ketones. The addition of

ployed in the Production of Petroleum Oils

p-Cresol	Methylethylketone	Dichloroethane	Acetone	Benzene	Toluene
$CH_3C_6H_4OH$ 108.06 1.0341	$CH_3COC_2H_5$ 72.11 0.8050	$C_2H_4Cl_2$ 98.96 1.2520	CH_3COCH_3 58.08 0.7920	C_6H_6 78.11 0.8790	$C_6H_5CH_3$ 92.06 0.8670
34.6 202.3	−86.3 79.6	— 83.7	−94.7 56.1	5.5 80.1	−94.9 110.6
2.2	22.6 (20 °C)	0.88 (20 °C)	∞	0.175 (10 °C)	0.037 (10 °C)
14.5	9.9 (20 °C)	0.14 (15 °C)	∞	0.041 (10 °C)	0.030 (10 °C)
98.7	73.45	72.0	—	69.25	84.1
6 — —	89.0 — —	80.5 — —	— — —	91.17 — —	80.4 — —
2.09	2.30	—	2.16	1.72	1.68
421	421	324	515	396	363

water increases the selectivity of a solvent and lowers its total dissolving ability. The introduction of benzene and toluene, on the contrary, diminishes the selectivity of a solvent while increasing its total dissolving ability.

Below are given the general requirements which solvents must meet.

1. A solvent must have a clearly expressed selective solubility and retain it within a broad interval of temperatures.
2. A solvent must not dissolve well in the product being purified.
3. A great difference between the densities of the solvent and stock is desirable; this makes it easier to divide the substances into phases.
4. A solvent must be chemically stable and chemically inert with respect to the stock, it must not be toxic or explosive and must not corrode the equipment.
5. A solvent must lend itself to regeneration readily and completely. For this purpose, its boiling point must be considerably lower than that of the oil. But a too low boiling point is also undesirable because the process has to be conducted under pressure.

6. A solvent must have a low heat of vaporization, which lowers the energy requirements and the consumption of cooling water.

7. A solvent must be cheap and available.

The physical properties of selected solvents employed for the production of oils are given in Table 13.

The following factors are also significant for processes employing selective solvents to clarify oils, namely, the temperature of the process, the critical temperature of dissolution of the oil fraction in the solvent, the solvent-to-stock ratio, and the way of reacting the solvent with the stock. These factors will be treated in detail in the sections devoted to the relevant processes. The pressure tells only when liquefied gases (propane, sulphur dioxide) are used as the solvents.

The solvent is regenerated from the solutions of the oil and those of the undesirable components in several stages. First the solvent is distilled off at an increased or atmospheric pressure, next with the use of steam, and sometimes with the use of vacuum. The residual content of the solvent in the clarification products must not exceed 0.005-0.02%.

The valuable hydrocarbons of oil, as mentioned above, can get into the extract or the gatch. This mainly occurs owing to the insufficient selectivity of the solvent with respect to hydrocarbons which in their structure are intermediate between the valuable and undesirable components of oil. The loss of these components, called the internal or solvent raffinate in phenol and furfural clarification or simply oil in dewaxing, lowers the yield of the target product. The solvent raffinate can be separated by the following technological procedures:

(1) lowering the temperature of the extract solution;

(2) adding water to the extract solution;

(3) adding the extract to the extract solution;

(4) washing with a portion of fresh solvent at an elevated temperature.

The first three methods improve the selectivity of the solvent, which separates the solvent raffinate from the extract solution, while the fourth one separates the oil from the gatch or petrolatum.

10.3. Deasphalting

Residue oils are produced from tars and semi-tars. These fractions, especially if obtained from resinous petroleums, may contain over 50% of resins and asphaltenes that have to be removed. The complicated composition of resinous and asphaltenic compounds makes it difficult to choose selective solvents for them. It is therefore better practice to choose a solvent for the valuable hydrocarbons in the oil. The resinous and asphaltenic substances will practically not dis-

solve in this solvent and will precipitate. Generally liquid propane is used as the solvent.

Process Temperature. The region of temperatures in which resins are easily separated from the solution of the oil hydrocarbons in propane ranges from 50 to 85 °C.

The upper temperature limit is restricted by the critical temperature of propane liquefaction (96.8 °C). When the process temperature is closer to the critical one, the dissolving ability of the liquid propane is lower, and the oil hydrocarbons dissolve in it more poorly, precipitating partially together with the resins. The oil yield consequently drops. Conversely, when the temperature is lowered, the dissolving ability of the liquid propane increases, and already at 40 °C the resins dissolve partly in the propane, which detracts from the quality of the clarified oil.

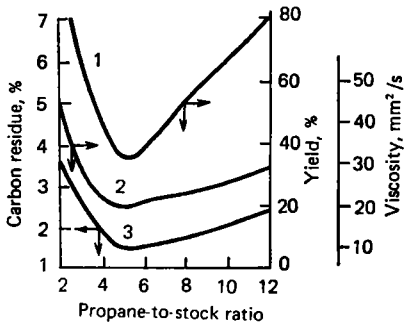

Fig. 86. Yield (*1*), carbon residue (*2*) and viscosity (*3*) of deasphaltizate against the volume ratio of propane in the stock

The solvent and stock interact in a column apparatus. The propane is fed into the bottom of the column and rises in counterflow to the heavier stock fed in at the top and moving downward. A temperature of 75-85 °C is maintained in the upper part of the column, and of 50-60 °C in the bottom part. The creation of a temperature difference between the top and bottom of a column makes it possible to separate the resins and asphaltenes from the oils more thoroughly. This temperature difference, which has been called the deasphalting gradient, usually equals 15-20 °C.

To keep the propane in a liquefied state, the deasphalting process is conducted under a pressure of 4.0-4.5 MPa.

Solvent-to-Stock Ratio. The required solvent-to-stock ratio is determined experimentally and depends on the hydrocarbon content in the stock. The higher their content, the larger must be the ratio between the volume of the propane and that of the stock. A volume propane-to-stock ratio from 4:1 to 8:1 is employed. An increase in the amount of propane to a definite limit improves the precipitation of the resins and asphaltenes, and this, in turn, favourably affects the quality of the deasphaltizate. From a certain value of the ratio different for each kind of stock, the excess propane partly dissolves the undesirable components. The yield of the deasphaltizate grows, but its quality degrades (Fig. 86).

A deasphalting process can be conducted in one stage, but better

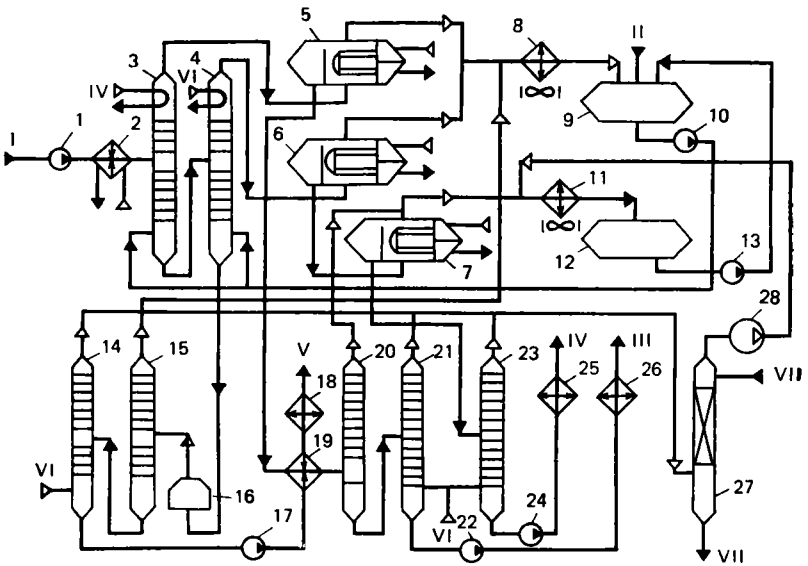

Fig. 87. Flow diagram of plant for the two-stage deasphalting of tar by propane:

1, 10, 13, 17, 22, 24—pumps; *2*—steam heater; *3, 4, 14, 15, 20, 21, 23*—columns; *5-7*—evaporators; *8, 11, 18, 25, 26*—coolers; *9, 12*—tanks; *16*—furnace; *19*—heat exchanger; *27*—mixing drum; *28*—compressor; *I*—feed stock; *II*—propane; *III*—deasphaltizate of first stage; *IV*—deasphaltizate of second stage; *V*—asphalt; *VI*—steam; *VII*—water

results are achieved when two stages are used. The asphalt solution obtained in the first stage is deasphaltized in the second one to extract the remaining valuable oil hydrocarbons from it. A two-stage process increases the yield of oil from the tar by 10% in comparison with a one-stage process. The deasphaltizates of the first and second stages differ greatly in quality. That of the second stage is used for producing very viscous oils. The quality of tar obtained from Romashkino petroleum and the products of deasphalting produced from it are given below:

	Tar	Deaspaltizate I	Deasphaltizate II	Asphalt
Specific gravity, d_4^{20}	1.010	0.915	—	—
Carbon residue, %	18-20	1.1-1.3	1.5-2.2	—
Viscosity at 100 °C, mm²/s	—	20-23	30-55	—
Softening point, °C	35	—	—	66-75

Flow Diagram. Figure 87 shows a flow diagram of a plant for the two-stage deasphalting of tar. The feed stock—tar—is fed by stock pump *1* into steam heater *2* and further into the middle of extraction column *3* of stage *I*. Pump *10* delivers liquid propane

into the bottom part of column *3* under pressure. The deasphaltizate solution in propane from stage *I* is withdrawn from the top of column *3*, while the asphalt solution of stage *I* is directed from the bottom of column *3* into the middle of second stage extraction column *4*. Liquid propane is also fed into the bottom part of column *4*. The deasphaltizate solution in propane of stage *II* is withdrawn from the top of column *4*.

The solvent from the deasphaltizate solutions of the first and second stages is regenerated separately. The deasphaltizate solution of the first stage from the top of column *3* flows into evaporator *5* where part of the propane is evaporated. Next the first-stage deasphaltizate solution is heated in exchanger *19* and is directed into column *20* where another part of the propane is evaporated because of the reduction in pressure. The first-stage deasphaltizate solution from the bottom of column *20* flows into column *21* where the propane is finally stripped with steam. From the bottom of column *21*, the first-stage deasphaltizate is discharged from the plant by pump *22* through cooler *26*.

The propane vapour under a pressure of 2.7 MPa from evaporators *5* and *6* and column *15* condenses in cooler *8* and is collected in tank *9*. The propane vapour under a pressure of 1.9 MPa from evaporator *7* and column *20* condenses in cooler *11* and is collected in tank *12*, whence pump *13* delivers it into tank *9*. The gaseous propane and water vapour from columns *14*, *21*, and *23* are cooled in mixing drum *27* with water spraying. The propane from the top of this column flows into compressor *28*, is compressed to 1.9 MPa, and is fed into the liquid propane system.

Technological Conditions in Main Apparatus. These conditions are as follows:

	Column *3*	Column *4*
Volume propane:stock ratio	7:1	6:1
Pressure, MPa	4.3	3.6
Extraction temperature, °C:		
at top	87	82
at bottom	63	60
Load on unit cross-sectional area, $m^3/(m^2 \cdot h)$	34.7	44.0
Pressure, MPa:		
in columns *14*, *21*, *23*	0.1	
in evaporators *5*, *6* and column *15*	2.7	
in evaporator *7* and column *20*	1.8	
Temperature, °C:		
in evaporators *5* and *6*	50-100	
in evaporator *7*	150	
at outlet from evaporator *6*	200-250	

Material Balance. The material balance of the process when working with tar of Romashkino petroleum is as follows (in %):

Feed		*Products*	
Tar of Romashkino petroleum . .	100.0	Deasphaltizate:	
		first stage	28.4
		second stage	10.0
		Asphalt . . .	61.6
		Total	100.0

Equipment. The main apparatus of a plant having a capacity of 250 000 tonnes a year is an extraction column 3 m in diameter and 20 m high. The column has 11 plates of the shutter type. The top fifth part of the column accommodates a settling zone without plates that is provided with six internal steam heaters. The distribution of the propane between the solutions of deasphaltizate and asphalt can be seen from the material balance of the column (in %):

Feed		*Products*	
Stock	100	Deasphaltizate solution	390
Propane	400	including oil	(28)
		including propane	(362)
Total	500	Asphalt solution	110
		including asphalt	(72)
		including propane	(38)
		Total	500

The propane is delivered by a Model H-500-420СГ centrifugal pump (delivery 420 m^3/h, intake pressure 2.7 MPa, differential head 500 metres of liquid column). The pump is outfitted with an end packing.

Control and Automation of Process. The main process parameters are controlled automatically. The temperature at the top of columns *3* and *4* is regulated by feeding steam into the internal steam heaters of the columns. The rate of flow of the stock and propane into the columns must be constant. The level of the phase interface in the columns is kept constant by means of valves installed on the line discharging the asphalt from the column bottom. The pressure in the system is regulated by valves on the outlet of the propane vapour from evaporators *5-7*. The temperature in the evaporators is regulated by valves on the lines feeding steam into them, and at the outlet of the asphalt solution from furnace *16* by a valve on the line feeding fuel into the furnace.

Safety Precautions. Propane is the main hazard during plant operation. It is explosive and its vapour is toxic. The propane is under pressure, therefore special attention must be given to thorough airtightness of all the equipment, apparatus and pipelines. The pump and compressor house premises are outfitted with automatic gas analysers, and all premises are equipped with forced and exhaust ventilation. The plant is provided with a defoaming device. A sharp

increase in the rate of feeding propane into the columns raises the pressure in the propane stripping system. This is why the rate of feeding it in must be raised slowly.

The most dangerous accidents include the cessation of water supply to the plant and leakage in the pipelines and apparatus. In both cases, it is necessary first of all to call in a fire brigade and gas trouble crew, stop the propane pumps, shut off the supply of steam to the evaporators and of fuel to the furnace, admit steam into the combustion chamber, and stop the feeding of stock to the plant.

Technical and Economical Indices. The approximate technical and economical indices of operation per tonne of deasphaltizate are as follows:

Steam, GJ	1466.5-2304.5
Circulation water, m^3	28.4-47.0
Electrical energy, MJ	9.7-16.6
Fuel, kg	9.6-11.5

The losses of propane depend on the solvent-to-stock ratio and are about 0.1% of the volumetric flow rate of the propane.

10.4. Phenol and Furfural Treatment

Both distillate and residue oil fractions are subjected to selective treatment to remove resinous and asphaltenic compounds and also polycyclic arenes with short side chains. This improves the colour of the oil, increases the viscosity index, lowers the carbon residue and the amount of sulphur-containing compounds.

Phenol and furfural are the most popular solvents in industrial practice. When mixed with an oil fraction, they dissolve the undesirable components of the oil very well and the valuable hydrocarbons relatively sparingly. Two phases form when oil is treated with a solvent. The upper phase—a raffinate solution—contains oil with a small amount of the solvent, while the lower phase—the extract solution—contains the bulk of the solvent and the undesirable components. The amount of the solvent must be optimal.

At a constant temperature, the compositions of the extract and raffinate phases are in equilibrium. An increase in the solvent-to-stock ratio lowers the concentration of the extract solution and disturbs the phase equilibrium. This causes a part of the hydrocarbons to pass over from the raffinate into the extract solution. The degree of purification grows and the raffinate yield diminishes. Lowering of the solvent-to-stock ratio produces the opposite result. But with too large volumes of the solvent, a homogeneous solution without phase separation may form.

Treatment with selective solvents is possible under such temperature conditions when two phases exist. Elevation of the temperature

is attended by a growth in the dissolving ability of the solvent, while its selectivity slowly decreases. At the consolute temperature, a homogeneous solution is obtained. This is why selective treatment solvents have to meet the specific requirement that the consolute temperature must be high enough to enable extraction to be conducted within the temperature range of 80-150 °C.

Extraction with phenol and furfural is performed in column apparatus. The solvent, having a higher density than the stock, is fed in at the top, and the stock is fed in at the bottom of a column. Rising higher and higher in the column and being in constant contact with the solvent, the stock loses more and more of its undesirable components, whereas the solvent flowing downward becomes richer and richer in resinous and polycyclic compounds. The critical temperature of the raffinate grows. To improve the extraction process, a higher temperature is maintained at the solvent inlet than at the oil inlet. The difference of the temperatures, which depends on the properties of both the solvent and the stock, is called the **extraction temperature gradient.**

The solvent and the optimal treatment parameters are selected in each individual case experimentally depending on the quality of the feed stock and the requirements to the product. Furfural has a number of advantages over phenol. It is less toxic, gives a higher (by 12-15%) yield of the raffinate, and is considerably more economical than phenol because of its lower boiling point and specific heat of vaporization. In a number of cases, however, especially when treating residue oils, the quality of the raffinate after furfural treatment is poorer than after treatment with phenol, and an increase in the furfural-to-stock ratio produces no effect. Furfural dissolves resins poorer than phenol, therefore oil after furfural treatment has a darker colour.

The quality and yield of the raffinate can be improved by using a more efficient solvent such as N-methylpyrrolidone instead of phenol and furfural. N-methylpyrrolidone is stable, not aggressive, boils at 206 °C, melts at —24 °C, and is less toxic and more selective than phenol and furfural.

10.4.1. Selective Treatment with Furfural

Furfural (see Table 13) extracts polycyclic arenes and cycloalkane-arenes very well from oils with a high raffinate yield. Its shortcomings include its ability to become resinified under the action of a high temperature and oxygen, its rather high solubility in water, and its toxicity.

The change in the quality of oil fractions as a result of furfural extraction can be appraised by comparing such important indices as the carbon residue and the viscosity index for three stocks and

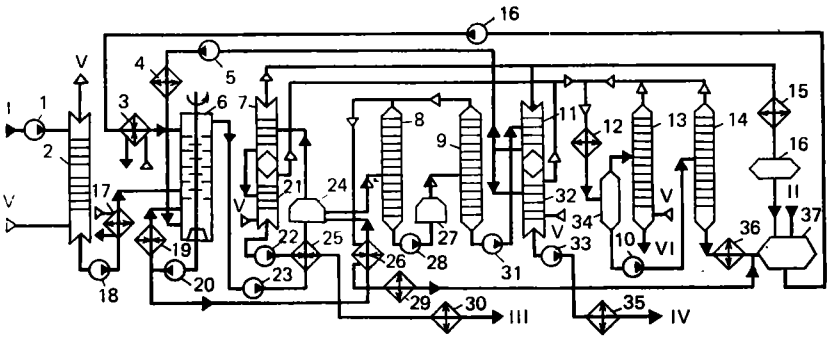

Fig. 88. Flow diagram of plant for the selective treatment of oils with furfural; *1, 5, 10, 16, 18, 20, 22, 23, 28, 31, 33*—pumps; *2, 6, 7-9, 11, 13, 14, 21, 32*—columns; *3*—steam heater; *4, 12, 15, 17, 19, 29, 30, 35, 36*—coolers; *16, 34, 37*—tanks; *24, 27*—furnaces; *25, 26*—heat exchangers; *I*—feed stock; *II*—furfural; *III*—raffinate; *IV*—extract; *V*—steam; *VI*—water

the relevant raffinates (Table 14). The viscosity index increases by 25, 30, and even 58 units, while the carbon residue decreases from three to eight times.

Table 14. **Quality of Raffinates Produced in Furfural Treatment of Oils**

Indices	Stock I	Raffinate I	Stock II	Raffinate II	Stock III	Raffinate III
Specific gravity, d_4^{20}	0.922	0.891	0.916	0.896	0.893	0.850
Viscosity index	−3.5	52	25	50	77	108
Carbon residue, %	0.14	0.04	0.75	0.28	0.94	0.12
Pour point, °C	−20	−17	−11	−1	35	45

Flow Diagram (Fig. 88). Stock pump *1* delivers the oil fraction into deaerating column *2*, where the dissolved air is removed from the oil by steam. From column *2*, the oil is directed via cooler *17* into the middle part of the disk contact column *6*. The furfural heated in steam heater *3* is introduced at the top. The extract solution settles in the bottom part of the column. Here a secondary raffinate is separated from the extract owing to lowering of the temperature of the bottom of column *6* and the introduction from column *11* of the extract freed of the solvent. The raffinate solution from the top of contact column *6* is fed by pump *23* through exchanger *25* and furnace *24* into columns *7* and *21* consecutively for stripping of the solvent.

Steam is introduced into column *21*. The raffinate from the bottom of column *21* after being cooled in exchanger *25* and cooler *30* is discharged from the plant by pump *22*. The extract solution from the bottom of contact column *6* is withdrawn by pump *20*.

Part of the solution via cooler *19* is recycled to the bottom of the contact column to lower the temperature in it, while the other part of the solution is directed for regeneration of the solvent through exchanger *26* and furnace *24* into column *8*. Further, the extract solution from the bottom of column *8* is fed by pump *28* through furnace *27* into column *9* and from the bottom of the latter by pump *31* into column *11*, whence it is partly returned by pump *5* to the bottom of column *6*. The remaining part flows into column *32*. Pump *33* discharges the extract from the bottom of column *32* out of the plant.

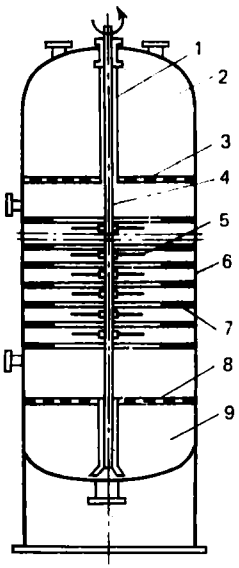

Fig. 89. Rotary disk contact column: *1*—shaft housing; *2*, *9*—top and bottom settling zones; *3*, *8*—sieve plates; *4*—rotor shaft; *5*—rotor disks; *6*—housing; *7*—stator partitions

The furfural from the extract solution is thus regenerated in four stages, namely, in columns *8* and *9* under pressure, and in columns *11* and *32* under vacuum. Steam is fed into columns *32* as in column *21*. The vapour of the dry furfural from columns *7* and *11*, and also from columns *8* and *9* condenses and gathers in tank *37*, whence pump *10* delivers the furfural into contact column *6*.

From columns *21* and *32*, the furfural vapour and steam are directed into the system for separating the water and furfural. After condensation in cooler *12*, the water and furfural are collected in tank *34*, where they separate into two layers—the top one is a solution of furfural (7%) in water, and the bottom one is a solution of water (6%) in furfural. The top layer is introduced into column *13* heated by live steam. Water containing traces of furfural is withdrawn from the bottom of column *13*. This water is used at the plant to produce steam. Thus, first, the losses of furfural are diminished, and, second, pollution of the sewage is reduced. The bottom layer is fed into column *14* heated by a coil with steam. From the bottom of column *14*, the dry furfural flows into tank *37*. The vapours of an

azeotropic mixture of furfural and water are withdrawn from the top of columns *13* and *14* and are fed again into cooler *12* and tank *34*. Columns *7-9*, *11*, *21*, and *32* are sprayed with dry furfural.

Equipment. The main apparatus of a plant is a vertical rotary disk contact column with a capacity of about 40 tonne/h, a diameter of 2.4 m, and a height of 13.1 m (Fig. 89). Stator annular partitions 1610 mm in diameter are fastened on the inner walls of the column. They form 20 chambers each 0.29 m in height along the height of the column. A vertical shaft with disks 1.22 m in diameter fastened to it passes through the centre of the column. The disks rotate in the central part of the chambers between the annular partitions. The shaft (rotor) is driven by an electric motor via a variable-speed reduction gear. The rotating rotor disks together with the annular stator partitions form the effective working zone of the column. Settling zones are located above and below the working zone and are separated from it by sieve plates. The parts of the rotor shaft passing through the settling zones are confined in a housing to prevent the liquid from rotating together with the shaft in these zones.

Technological Conditions. The technological conditions of the process are as follows:

Furfural-to-stock ratio:	
for distillate oils	1.5-3.5:1
for residue oils	2.5-5:1
Temperature, °C:	
in extraction column:	
at top	95-110
at bottom	55-75
at outlet from furnace:	
raffinate solution from furnace *24*	200-220
extract solution from furnace *27*	230
Extraction temperature gradient, K	35-40

Material Balance. The material balance of the furfural treatment of distillate oil fractions from Romashkino type sour petroleums is given below (in %):

	300-400 °C fraction	400-500 °C fraction
Feed		
Stock	100.0	100.0
Furfural	150.0	150.0
Total	250.0	250.0
Products		
Raffinate	73.85	75.85
Extract	25.95	23.95
Furfural	149.80	149.80
Losses	0.40	0.40
stock	(0.2)	(0.2)
furfural	(0.2)	(0.2)
Total	250.0	250.0

10.4.2. Selective Treatment with Phenol

Phenol (see Table 13) is a good extractant of resinous, polycyclic, and partly sulphur-containing compounds from oils. Its selectivity is lower than that of furfural, while its solvent action is higher. The shortcomings of phenol include its ability to become resinified (although to a smaller extent than furfural), its toxicity, rather high solubility in water, high melting point, and corrosive action on the equipment.

The quality of the raffinates obtained in the phenol treatment of distillate and residue fractions is illustrated by the data in Table 15.

Table 15. **Quality of Stock and Raffinates in the Phenol Treatment of Distillate and Residue Fractions of Romashkino Petroleum**

Indices	350-420 °C fraction		420-500 °C fraction		Deasphaltizate (above 500 °C)	
	stock	raffinate	stock	raffinate	stock	raffinate
Specific gravity, d_4^{20}	0.881	0.850	0.914	0.870	0.901	0.889
Viscosity, mm^2/s:						
at 50 °C	12.3	11.3	40.0	34.0	—	—
at 100 °C	—	—	—	6.7	23.3	19.7
Pour point, °C	21	26	35	—	44	—

Flow Diagram (Fig. 90). The oil fraction to be purified is fed by stock pump *13* through exchanger *15* and steam heater *3* into the top of absorber column *2*. A mixture of steam and phenol is introduced into the bottom part of the absorber. The phenol vapour is entrained by the oil, while the water after condensation of the steam in cooler *1* is discharged into the sewer. Pump *14* feeds the oil from the bottom of absorber column *2* via cooler *16* into the middle of extraction column *5* onto whose top plate molten phenol is fed; phenol water is fed into its bottom part to separate the secondary raffinate from the extract.

The solvent is regenerated from the raffinate solution in two stages. The raffinate solution from the top of column *5* is fed by pump *25* through exchanger *27* and furnace *23* into column *6*, where the main amount of the phenol evaporates. From the bottom of column *6*, the raffinate solution flows over into column *22*, where the phenol residues are stripped by steam. The raffinate from the bottom of column *22* is withdrawn from the plant by pump *24* via exchanger *27* and cooler *30*.

The extract solution is freed from the solvent in three stages. It is taken in from the bottom of column *5* by pump *19*. A part of the

solution is recycled to the bottom of column *5* through cooler *20* to lower the temperature of the bottom of column *5* and separate the secondary raffinate. The other part of the extract solution is introduced into column *10* through exchanger *26*. In column *10*, the water is distilled off in the form of the vapours of an azeotropic mixture of water and phenol. The required temperature at the bottom of column *10* is maintained by boiler *28*. Pump *29* feeds the extract solution from column *10* through furnace *31* into column *11*, where the main part of the dry phenol is distilled off. The temperature at

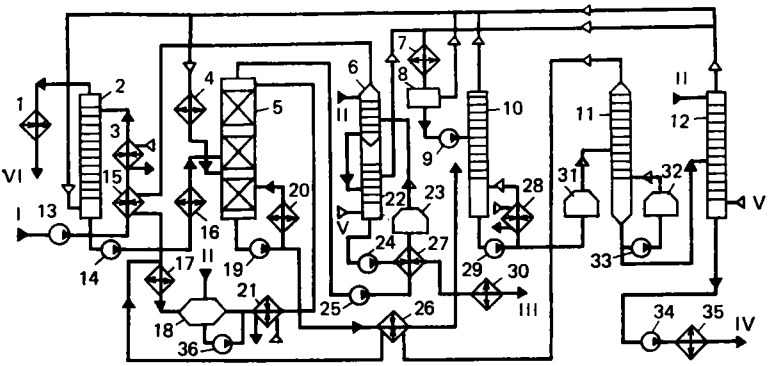

Fig. 90. Flow diagram of plant for the selective treatment of oils with phenol: *1, 4, 7, 16, 17, 20, 30, 35*—coolers; *2, 5, 6, 10-12, 22*—columns; *3, 21*—steam heaters; *8, 18*—tanks; *9, 13, 14, 19, 24, 25, 29, 33, 34, 36*—pumps; *15, 26, 27*—heat exchangers; *23, 31, 32*—furnaces; *28*—boiler; *I*—feed stock; *II*—phenol; *III*—raffinate; *IV*—extract; *V*—steam; *VI*—water

the bottom of column *11* is maintained by circulation of the bottom product through furnace *32*. From the bottom of column *11*, the extract with a small amount of phenol flows into column *12* where the residual phenol is stripped by steam.

From columns *6* and *11*, the vapour of dry phenol flows into exchangers *15*, *26* and cooler *17* for condensation and cooling; from here the liquid phenol flows into dry phenol tank *18* whence pump *36* delivers the phenol via steam heater *21* into column *5*. Phenol vapour and steam are discharged from the top of columns *22* and *12*. They condense in condenser and cooler *7*, are collected in receiver tank *8*, whence pump *9* feeds them to the middle of column *10*. The uncondensed vapours from tank *8* and the azeotropic mixture from column *10* partly flow for condensation into cooler *4* and further in the form of phenol water into the bottom of column *5*. The other part of the flow is fed into absorber column *2* for trapping the phenol. Columns *6*, *12*, and *22* are sprayed with phenol, and column *10* with phenol water.

Technological Conditions. The technological conditions of the process are as follows:

Temperature, °C:	
at top of column *2*	115
at top of column *5*	58-88
at bottom of column *22*	34-51
at outlet from furnace *23*	270-290
at outlet from furnace *31*	350-360
at outlet from furnace *32*	260-280
Phenol-to-stock ratio:	
for distillate fractions	1.5:1-2.2:1
for residue fractions	4.5:1
Settling time in column *5*, min:	
raffinate	60-120
extract	30-36
Tolerated rate of flow of phase mixture: through unit cross-sectional area of extraction column, $m^3/(m^2 \cdot h)$	10-11

The distribution of the solvent between the extract and raffinate phases can be appraised from the material balance of the extraction column and the phenol treatment plant.

Material Balance of Extraction Column. The material balance of the extraction column (in %) is given below:

Feed		*Products*	
Initial distillate	100.0	Raffinate solution	93.7
Phenol	200.0	raffinate	(75.0)
Phenol water	7.0	phenol	(18.7)
water	(6.4)	Extract solution	213.3
phenol	(0.6)	extract	(25.0)
		phenol	(181.9)
Total	307.0	water	(6.4)
		Total	307.0

Material Balance of Plant. The material balance of a plant for the phenol treatment of the oil fractions of Romashkino petroleum (in %) is as follows:

	350-420 °C fraction	420-490 °C fraction	Residue (above 490 °C)
Feed			
Stock	100.0	100.0	100.0
Phenol	150.0	220.0	450.0
Total	250.0	320.0	550.0
Products			
Raffinate	66.7	63.0	66.5
Extract	32.8	36.5	33.0
Phenol	149.8	219.7	449.5
Losses:			
stock	0.5	0.5	0.5
phenol	0.2	0.3	0.5
Total	250.0	320.0	550.0

Equipment. The main apparatus of a plant with a capacity of 650 000 tonnes a year is an extraction column packed with Raschig rings. The column diameter is 4 m, the packing height is 15 m, and the height of the entire column is 40 m. The columns for regeneration of the solvent are outfitted with 12 to 20 cap plates with S-shaped elements.

Horizontal air coolers are employed for cooling and condensing the streams.

Process Control and Automation. The quality of both phenol and furfural treatment depends on the operation of the extraction column, in which it is necessary to automatically maintain a definite level of the phase interface of the raffinate and extract solution, and also a definite extraction temperature gradient. The latter is kept constant by ensuring a constant temperature of feeding the phenol or furfural into the top part of the extraction column and by circulation of a part of the extract solution through a cooler with recycling into the bottom part of the extraction column.

Safety Precautions. Phenol and furfural are toxic, all the equipment must be sealed to the maximum possible extent, and discharge of the solvent into the atmosphere must be excluded. A special drainage system is used to gather all the effluents containing phenol or furfural.

The level gauge of the tank for storing phenol is blocked with a device automatically preventing overfilling of the tank.

Technical and Economical Indices. The approximate technical and economical indices per tonne of raffinate are as follows:

	Phenol treatment	Furfural treatment
Steam, GJ	377.2-963.7	125.7
Circulation water, m^3	10.9-24.4	11.5
Electrical energy, MJ	21.2-41.4	33.5
Fuel, kg	48-67	30

10.5. Treatment with Double Solvents

Treatment with double solvents is mainly employed to produce residue oils with improved properties.

The process is characterized by the joint use of two immiscible solvents absolutely different in their nature. One of them—liquid propane—is a good extractant of valuable hydrocarbons from the stock and facilitates the precipitation of undesirable components (resins, asphaltenes, polycyclic hydrocarbons). The second one—a mixture of phenol and cresol—is a good solvent of just these undesirable components. The two solvents sharply differ in their physical properties and dissolve in each other insignificantly (see Table 14). The large difference in their specific gravities makes it easy to divide

the solutions of the extract and raffinate into two layers. The sharply differing boiling points make it possible to regenerate separately first the propane, and then the phenol-cresol mixture from the extract and raffinate solutions.

A combined process of light deasphalting with propane and treatment with double solvents has come into use at Soviet refineries. (Treatment with double solvents is called the **Duo-Sol process** in industrial practice.) The treatment with propane and double solvents yields a purified oil distillate, i.e. raffinate, and also an extract and asphalt.

The quality and yield of the raffinate are affected to a major extent by the solvent-to-stock ratio (Table 16) and the composition

Table 16. **Influence of Solvent-to-Stock Ratio on the Yield and Quality of the Raffinate**

Solvent, parts per 100 parts (mass) of stock		Raffinate yield, % (volume)	Viscosity index	Carbon residue, %
propane	phenol-cresol mixture (40:60)			
Stock without solvents		100	20	2.3
200	150	85	60	0.72
400	150	77	58	0.51
400	400	67	82	0.10
400	600	60	83	0.07

of the phenol-cresol mixture. These factors are selected experimentally depending on the stock quality. Generally 300-400 parts of propane and 400-600 parts (by mass) of the phenol-cresol mixture are taken for 100 parts of the stock. The composition of the phenol-cresol mixture ranges from 35-60% of phenol and 65-40% of cresol.

The quality of the raffinate, extract, and asphalt obtained as a result of treating the tar of Romashkino petroleum with double solvents is shown below:

	Stock	Raffinate	Extract	Asphalt
Specific gravity, d_4^{20} . .	0.980	0.884	0.980	1.05
Carbon residue, % . . .	16.0	0.27	—	—
Viscosity at 100 °C, mm²/s	180	19.0	68.0	—
Pour point, °C	30	40	20	69*

* Melting point.

The treatment plant consists of three sections: (1) deasphalting with propane; (2) selective treatment with double solvents (extraction); and (3) regeneration of the solvents from the raffinate, extract, and asphalt solutions.

Two-stage deasphalting with propane is conducted in horizontal settlers.

Selective treatment—counterflow stepped extraction—is carried out in horizontal mixer settlers (Fig. 91). A plant generally has seven settlers. Pure propane and the extract from the second settler are fed into the first one at the left-hand end, while the pure phenol-cresol solvent and raffinate from the sixth settler are fed into the last one. The extract and raffinate solutions are mixed and separated in each settler. This is attended by an exchange of the components being extracted. The valuable hydrocarbons of oil pass from the

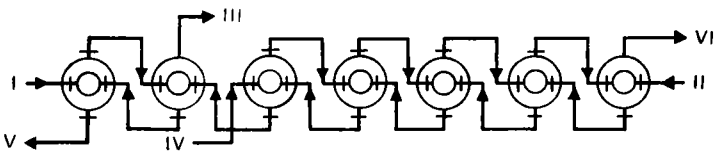

Fig. 91. Flows in mixer settlers:
I—liquefied propane; *II*—phenol-cresol mixture; *III*—raffinate mixture to deasphalting process; *IV*—deasphaltizate; *V*—extract solution; *VI*—raffinate solution to solvent distillation

extract solution into the raffinate one, while the undesirable components pass from the raffinate into the extract solution.

Moving in counterflow, the two solutions become more and more concentrated. Hence, the most concentrated extract solution is discharged from the first settler in the direction of propane flow, while the most concentrated raffinate solution is discharged from the last one. The raffinate from the second settler is used as a solvent in deasphalting because it consists of almost pure propane. The deasphaltizate—the stock for selective treatment—is fed into the third settler.

Each of the raffinate, extract, and asphalt solutions is regenerated in its own system. The solvents from the solutions of raffinate, extract, and asphalt are regenerated in four steps: under a pressure of 1.8 MPa (propane regeneration), 0.5 MPa, 0.1 MPa, and under vacuum (regeneration of the phenol-cresol mixture).

Flow Diagram. Figure 92 presents a flow diagram of a combined deasphalting and selective treatment process using double solvents.

In the section for deasphalting with propane (see Fig. 92*a*), the tar is fed by stock pump *1* through cooler *2* for mixing with fresh propane and raffinate from settler *15*. The mixture is cooled in cooler *3* and is directed to deasphaltizer *4*.

The asphalt solution from the bottom of deasphaltizer *4* is subjected to repeated treatment with the solvent (a mixture of the raffinate from settler *15* and pure propane) and flows into deasphaltizer *5*, from whose bottom the asphalt solution is delivered by pump *9*

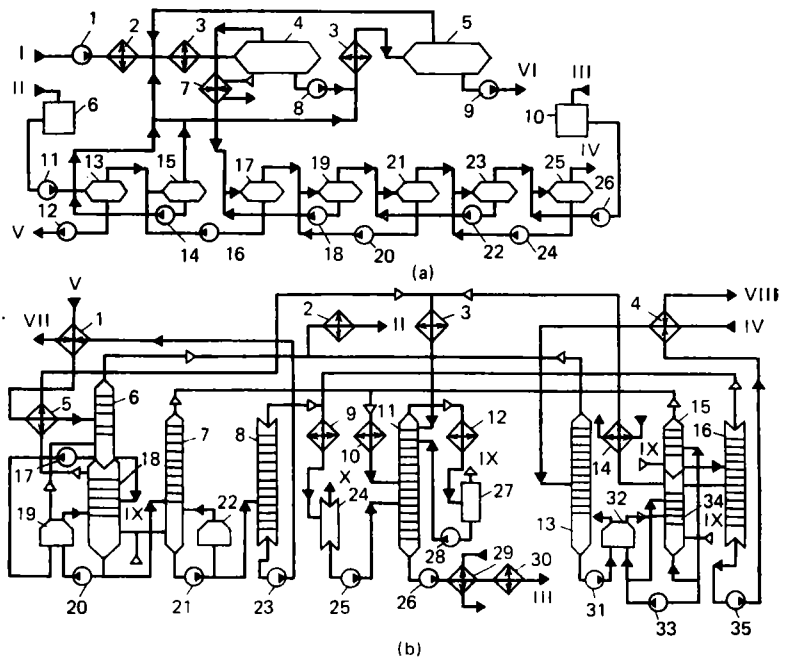

Fig. 92. Flow diagram of plant for treating oils with double solvents:
(*a*) Deasphalting and extracting section:
1, 8, 9, 11, 12, 14, 16, 18, 20, 22, 24, 26—pumps; *2, 3*—coolers; *4, 5*—deasphaltizers; *6, 10*—tanks; *7*—steam heater; *13, 15, 17, 19, 21, 23, 25*—mixer settlers;
(*b*) Solvent regeneration section:
1, 4, 5, 14, 29—heat exchangers; *2, 3, 9, 10, 12, 30*—coolers; *6-8, 11, 13, 15, 16, 18, 34*—columns; *17, 20, 21, 23, 25, 26, 28, 31, 33, 35*—pumps; *19, 22, 32*—furnaces; *24. 27*—tanks; *I*—feed stock; *II*—liquefied propane; *III*—phenol-cresol mixture; *IV*—raffinate solution; *V*—extract solution; *VI*—asphalt solution; *VII*—extract; *VIII*—raffinate; *IX*—steam; *X*—water

to the solvent regeneration section. The deasphaltizate from deasphaltizer *4* flows under its own pressure into the selective treatment section, is heated in heater *7*, and enters settler *17*.

The products flow in the selective treatment section as follows. The liquid propane is delivered by pump *11* into the mixer of settler *13*. Pump *14* also delivers the extract solution from settler *15* into this mixer. Pump *12* removes the extract solution from the bottom of settler *13* into the solvent regeneration section. From the top of settler *13*, the raffinate under its own pressure flows into the mixer of settler *15*, into which pump *16* directs the extract solution from settler *17*. From the top of settler *15*, the raffinate solution is delivered, as indicated above, into the deasphalting section, whence the deasphaltizate solution is returned to the mixer of settler *17*. Pump *18* feeds the extract solution from settler *19* for mixing with

the deasphaltizate. Hence, the raffinate solution from the preceding stage flows into each settler under its own pressure, and the extract solution from the following stage is delivered to it by a pump. The pure phenol-cresol solvent is fed into last settler *25* instead of the extract solution.

In the solvent regeneration section (see Fig. 92*b*), the extract solution via exchangers *1* and *5* is directed into column *6* for propane stripping. From the bottom of column *6*, the extract solution is transferred into column *18* into which steam is delivered. In columns *18*, *7*, and *8*, the phenol-cresol solvent is gradually stripped. From the bottom of column *18*, the extract solution flows into column *7*, from the bottom of this column it flows into column *8*. Column *7* is also supplied with steam, while a vacuum is maintained in column *8*. The extract, with the solvent removed from it, is withdrawn from the bottom of column *8* by pump *23* via exchanger *1* and is discharged from the plant.

The required temperature at the bottom of columns *6*, *18*, and *7* is maintained by circulation of the bottom product through furnaces *19* and *22*.

The solvent from the raffinate solution is regenerated in columns *13*, *15*, *34*, and *16* similar to regeneration of the solvent from the extract solution.

The propane vapour emerges from the top of columns *6* and *13* and condenses in cooler and condenser *2*. The liquid propane gathers in pure propane tank *6* (see Fig. 92*a*), whence it is directed for extraction.

The phenol-cresol vapour leaving the top of columns *18* and *34* is cooled and condensed in exchangers *5* and *14* and in cooler *3* and is directed into the top of drying column *11*. The phenol-cresol vapour from columns *7* and *15* is cooled and condensed in condenser and cooler *10* and is fed into the middle of column *11*. The vapour from columns *8* and *16* is cooled and condenses in condenser and cooler *9*, and the liquid product is gathered in vacuum receiver *24*. From the top of the latter, the uncondensed vapour flows into the suction line of a vacuum pump, while from its bottom the phenol-cresol solvent and water are directed by pump *25* into column *11*. From the bottom of column *11*, the dehydrated phenol-cresol mixture is delivered by pump *26* through exchanger *29* and cooler *30* into tank *10* (see Fig. 92*a*), whence it is again fed for extraction.

An azeotropic mixture of the phenol-cresol solvent and water emerges from the top of column *11*, condenses in condenser and cooler *12*, and flows into settler *27*.

The bottom layer, 90% of which is the solvent and 10% is water, is the reflux of column *11*. The top layer is water containing 6-9% of the solvent. This water is directed for washing by propane (not shown in the figure) for extracting the phenol and cresol from it, and is then used for the production of steam.

Solvent regeneration from the asphalt solution is not shown in the diagram.

Technological Conditions. The technological conditions of the process are as follows:

Temperature, °C:	
deasphalting	40
extraction	50
top of columns *6*, *13* (Fig. 92*b*)	65-85
bottom of columns *6*, *13*	300-325
top of columns *18*, *34*	270-280
bottom of columns *18* and *34*	280-320
Pressure, MPa:	
deasphalting	2.2-2.5
extraction	2.1-2.4
propane regeneration (first stage)	1.8
regeneration of phenol-cresol mixture:	
2nd stage	0.5-0.6
3rd stage	0.13
4th stage	0.09

Material Balance. The material balance of the process of treating the tar of Romashkino petroleum (in %) with double solvents is as follows:

Feed		*Products*	
Tar	100.0	Raffinate	30.1
		Extract	33.8
		Asphalt	35.8
		Losses	0.3
		Total	100.0

Equipment. The main apparatus is a mixer settler (Fig. 93). The extract and raffinate solutions flow via the central inlet into the mixing chamber inside the settler. The connection for discharging the extract solution is in the bottom part of the settler, and that for discharging the raffinate solution is in its top part. The size of an apparatus depends on the capacity of the plant. Generally, the capacity of one cubic metre of the extraction system is 0.7-0.8 m³/h of the total volumes of the stock, propane, and phenol-cresol mixture.

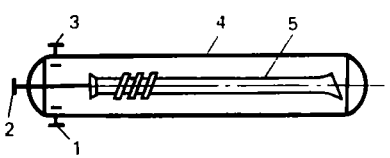

Fig. 93. Mixer settler:
1—connection for discharging extract solution; *2*—connection for feeding in extract and raffinate solutions; *3*—connection for discharging raffinate solution; *4*—housing; *5*—mixing chamber

The process of treatment with double solvents is characterized by high operating costs because from seven to eight kilogrammes of solvent are used per kilogramme of stock, but it gives higher yields

of raffinate of a higher grade than in the consecutive deasphalting and selective treatment with phenol.

Technical and Economical Indices. The approximate technical and economical indices per tonne of raffinate from tar of Romashkino petroleum are as follows:

Propane, kg	2.7-3.7	Circulation water, m^3	81.2-105
Phenol, kg	0.4-0.6	Electrical energy, MJ	179.3-230.4
Cresol, kg	1.0-1.5	Fuel, kg	89.7-102
Steam, GJ	363.6-1070.6		

10.6. Dewaxing

The solvent raffinates obtained from paraffinic petroleums contain solid high-molecular hydrocarbons that freeze out when the temperature is lowered. This causes oils to lose their mobility and become unsuitable for service under conditions of low temperatures.

To produce oils that can be used at —15, —30 °C and even lower temperatures, the solvent raffinates have to be dewaxed, i.e. freed of solid hydrocarbons. This is done by freezing out the latter from a raffinate solution in a specially selected solvent.

The solvent raffinates of distillate oil fractions contain mainly solid high-molecular alkanes with a normal or slightly branched chain of carbon atoms. These hydrocarbons precipitate when cooled in the form of large regular crystals. The solid product separated from distillate oils is called gatch.

The solvent raffinates of the residue oil fractions mainly contain solid high-molecular cycloalkanes and arenes with long alkane radicals of a normal or slightly branched structure. These compounds precipitate in the form of fine acicular crystals when the temperature is lowered. The solid product separated from the oil residues is called petrolatum or paraffin wax. The solid hydrocarbons are partly dissolved in the oil fraction, and are partly suspended in the form of very minute crystals.

Dewaxing is conducted with deep cooling either with or without selective solvents. But in the latter case the crystals of the solid hydrocarbons are small, have an irregular shape, and separate poorly from the oil. Complete purification is not achieved because a considerable amount of the solid hydrocarbons remains in the oil, while a part of the oil is entrained with the solid precipitate.

To easily and completely separate the solid hydrocarbons from the raffinate, it is necessary to obtain large crystals as regular as possible. Consequently, one of the tasks of the process is the creation of favourable conditions for growth of the crystals. This growth is affected by the following factors:

(1) the viscosity of the solution—a high viscosity of the solution prevents the growth of crystals;

(2) the rate of cooling the solution (in K/h)—at a high cooling rate the crystals do not have time to grow, and a large number of fine crystals forms instead of a small number of large ones;

(3) the concentration of the solid hydrocarbons in the solution—too great dilution retards the growth of the crystals because the path travelled by the solid hydrocarbon molecules before they encounter one another grows.

A large number of crystallization centres in a solution (particles of dispersed solid hydrocarbons can be such centres) also promotes the formation of minute crystals. To destroy the crystallization centres, the stock before beginning the process is heated to a temperature that is from 15 to 20 °C higher than the melting point of the solid hydrocarbons, and the latter after melting completely dissolve in the oil.

Solvents. The selective solvents employed in dewaxing must dissolve the valuable hydrocarbons of the oil fraction well and virtually not dissolve the solid hydrocarbons. Mixing of the oil fraction with a solvent improves the conditions of separation of the solid hydrocarbons previously dissolved in the oil fraction upon subsequent cooling. A reduction of the viscosity of the solution facilitates consolidation of the crystals.

The dewaxing solvents, in addition to the general requirements which selective solvents must comply with, must also meet specific requirements associated with a reduction of the operating costs. These solvents "must allow" high rates of cooling and the separation of the oil solution from solid hydrocarbons. They must also have a low dewaxing temperature effect. The **dewaxing temperature effect** or **temperature gradient** is the difference between the required pour point of the dewaxed oil and the temperature of cooling the solution that ensures the required pour point. A low dewaxing temperature gradient cuts the cost of cooling the solution, while high rates of cooling and separation enable the size of the apparatus to be reduced.

Light gasoline, liquefied propane, dichloroethane, and ketones are used as dewaxing solvents.

The most popular solvents in modern dewaxing processes are ketones such as acetone and methylethylketone. Ketones do not dissolve solid hydrocarbons, and at the same time they dissolve oil poorly. To improve their solubility of oil, toluene or its mixture with benzene is added to ketones. The dewaxing temperature effect of a mixture of ketones with toluene is not high, namely, from 10 to 0 °C. Ketones permit high rates of cooling (100 K/h) and filtration [70-100 kg/(m^2·h) relative to the feed stock].

High-molecular ketones such as methylisobutylketone are promising solvents. Oils dissolve so well in these ketones that no aromatic solvents have to be added. The absence of benzene and toluene

in the solvent lowers the dewaxing temperature gradient, increases the rate of filtration and the oil yield. The use of a one-component solvent simplifies operation of the plant.

Process Parameters and Quality of Target Product. The main parameters of a dewaxing process with the use of solvents include the solvent composition, the solvent-to-stock ratio, the rate of cooling, and the dewaxing temperature.

A change in the solvent composition (a change in the toluene-to-ketones ratio) makes it possible to vary the selectivity of a mixed solvent. An increase in the ketone content in the mixture lowers the pour point, but also lowers the yield of dewaxed oil. Conversely, an increase in the toluene content raises the pour point, but increases the oil yield. The solvent generally contains from 25 to 50% of ketones.

The solvent-to-stock ratio is selected depending on the viscosity of the stock. When the latter is higher, more solvent has to be used. But the dilution of the stock by the solvent should not be excessive. This may cause elevation of the oil pour point as a result of an increase in the amount of dissolved solid hydrocarbons in proportion to the growing amount of the solvent. Here the dewaxing temperature gradient also becomes poorer. In practice, a dilution from 1.5:1 (for low-viscous distillate oils) to 4.5:1 (for viscous residue oils) is employed.

Below is shown the quality of the feed stock and the dewaxing products:

	Raffinate of Romashkino petroleum (320-450 °C)	Dewaxed oil	Gatch
Specific gravity, d_4^{20}	0.859	0.864	0.822
Viscosity at 50 °C, mm²/s	2.4	4.89	—
Carbon residue, %	0.02-0.06	0.08-0.10	—
Pour point, °C	32-45	—10 to —20	46-50
Sulphur content, %	0.7-0.8	0.9-1.0	0.11

The pour point of the dewaxed oil lowers by 40-60 °C, while its carbon residue and viscosity grow because the removed solid hydrocarbons have a very low viscosity and carbon residue.

In dewaxing, the mixture is cooled in two stages. The first stage—up to a temperature higher than the cloud point by a few degrees—can be conducted rapidly. The second stage, from the beginning of turbidity up to the temperature at which the main crystallization occurs, should proceed quite slowly (at a rate not exceeding 60-80 K/h). Final cooling to the filtration temperature is performed much more intensely.

The way of mixing the stock with the solvent also affects the nature of crystal formation. In the dewaxing of a distillate stock, especially of a light one, a better crystalline structure forms when

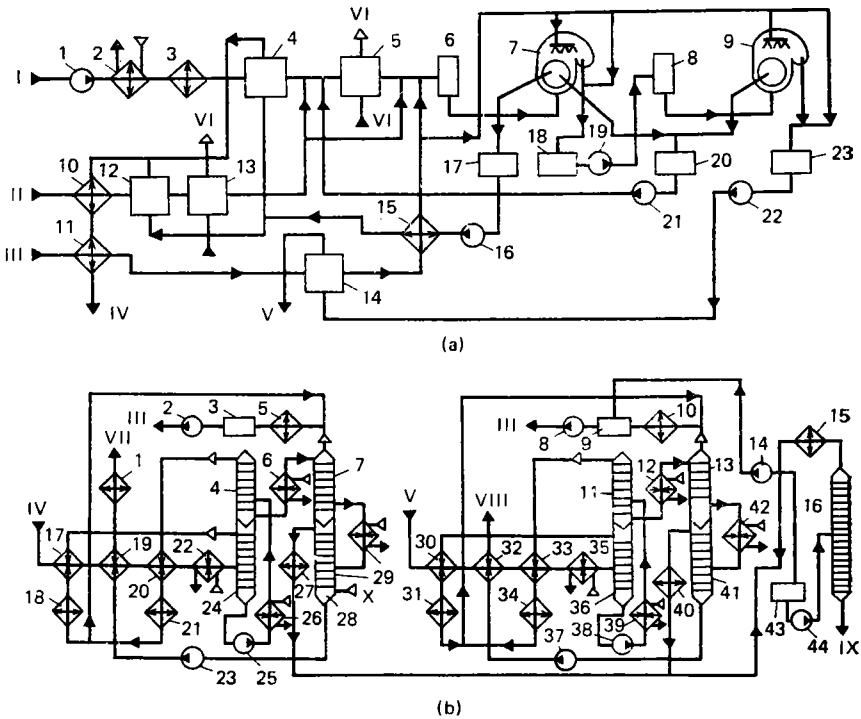

Fig. 94. Flow diagram of oil dewaxing plant using a ketone-toluene mixture.
(*a*) Crystallization section:
1, 16, 19, 21, 22—pumps; *2*—steam heater; *3*—cooler; *4, 5, 12-14*—crystallizers; *6, 8, 17, 18, 20, 23*—tanks; *7, 9*—filters; *10, 11, 15*—heat exchangers;
(*b*) Solvent regeneration section:
1, 5, 10, 15, 18, 21, 27, 31, 34, 40—coolers; *2, 8, 14, 23, 25, 37, 38, 44*—pumps; *3, 9, 43*—tanks; *4, 7, 11, 13, 16, 24, 28, 36, 41*—columns; *6, 12, 22, 26, 29, 35, 39, 42*—steam heaters; *17-20, 30, 32, 33*—heat exchangers; *I*—feed stock; *II*—moist solvent; *III*—dry solvent; *IV*—solution of dewaxed oil; *V*—gatch solution; *VI*—ammonia; *VII*—dewaxed oil; *VIII*—gatch; *IX*—water; *X*—steam

the stock is first cooled with a small amount of the solvent or without it. In the dewaxing of a residue stock, the entire solvent is added to it prior to cooling, which prevents the formation of fine crystals of the most high-melting paraffin waxes.

Flow Diagram. A dewaxing plant consists of (1) a crystallization and filtration section; (2) a solvent regeneration section, and (3) a cooler section and an inert gas system.

A flow diagram of the first and second sections intended for the dewaxing of the solvent raffinate of a distillate oil fraction is shown in Fig. 94.

In the crystallization and filtration section (Fig. 94*a*), the stock is fed by pump *1* through heater *2* and water cooler *3* into regenerator

crystallizer *4*, where it is cooled by a solution of dewaxed oil. Next the stock is mixed with the cooled moist* solvent and circulating filtrate and flows into crystallizer *5*, where it is cooled by liquid ammonia. After this, it is again mixed with a portion of the cooled moist solvent, and also with a portion of the cooled dry solvent. The crystals of the solid hydrocarbons precipitate from the solution. The suspension of the solid hydrocarbon crystals in the oil solution is directed into first filtration stage feed tank *6*, whence it flows over into first stage drum filter *7*.

In filter *7*, the solid hydrocarbons settle in the form of cakes on the filter drum, while the filtrate penetrates into the drum and is gathered in dewaxed oil tank *17*. The dewaxed stock solution is directed into the solvent regeneration section via crystallizers *4* and *12* and exchangers *10*, *11*, and *15*, where it is heated by removing heat from the stock, dry solvent, and moist solvent. The gatch cakes on the drum of filter *7* are washed with a portion of the dry solvent to remove the entrained oil, and the filtrate is gathered in tank *20* for low-grade dewaxed oil.

The gatch cut off the drum by a blade is forced by a worm feeder into tank *18*. The latter is also supplied with a portion of the dry solvent for diluting the gatch. From tank *18*, pump *19* transfers the gatch solution into tank *8* feeding the second stage filter, whence it flows into second stage filter *9*. The solid hydrocarbons remain in the form of a cake on the drum of filter *9*, while the filtrate—low-grade dewaxed stock—is gathered in tank *20*. The cake, as in the first stage filter, is washed with a portion of the dry solvent. The low-grade dewaxed oil is added by pump *21* to the feed stock being supplied to crystallizer *5*. The gatch is removed from the second stage filter in the same way as from the first stage one. The gatch solution is gathered in tank *23*, from which pump *22* directs it through crystallizer *14* into the solvent regeneration section. The gatch contains crystals of ice that got into it from the moist solvent.

In the solvent regeneration section (Fig. 94*b*), the solvent is separated from the dewaxed oil in four stages. The dewaxed oil solution is heated in exchangers *18-20* and steam heater *22* and flows consecutively into columns *4*, *24*, *7*, and *28*. Steam is fed into the bottom of column *28*. The dewaxed oil from the bottom of column *28* is withdrawn from the plant via exchanger *19* and cooler *1*. Dry solvent vapour emerges from the top of columns *4*, *24*, and *7*. It condenses, is cooled, and flows into dry solvent tank *3*, whence pump *2* recycles it to the crystallization section.

The solvent is also separated from the gatch in four stages, in columns *11*, *36*, *13*, and *41*. Moist solvent vapour emerges from the

* A solvent containing dissolved water is called moist, and one containing no water is called dry.

top of columns *11*, *36*, and *13*, condenses, and is cooled. The moist solvent gathers in tank *9*, whence pump *8* recycles it to the crystallization section.

Solvent vapour and steam are discharged from the top of columns *28* and *41*. After cooling and condensing, the solvent and water flow into tank *43*, where the liquid forms two layers. The top layer—the moist solvent, is delivered by pump *14* into tank *9*. The bottom layer containing 15% of methylethylketone is fed by pump *44* into ketone column *16* from whose bottom water is discharged into the sewerage system, while an azeotropic mixture of methylethylketone and water is recycled from its top into tank *43* via condenser *15*.

An inert gas is used to dry the cake from the solvent in the filters (by blowing over it), and also for providing a pad in the solvent tanks.

The cooling section is responsible for cooling the feed stock, solvent, and inert gas in a cooler plant with direct evaporation of the coolant (ammonia, propane, ethane) in the crystallizers at —35 and —43 °C.

Technological Conditions. The technological conditions in the plant are as follows:

Temperature of heat treatment, °C	60-80
first cooling stage (with water)	20-30
first filtering stage	—25
second filtering stage	—10
Pressure in vacuum filter housing, MPa	0.101
Vacuum in drum	0.015-0.03
Dewaxing gradient, °C	5-10
Rate of filtration relative to stock, kg/(m²·h)	90

Material Balance. Below is given the material balance of a plant for dewaxing the solvent raffinates of fractions of a mixture of Romashkino type petroleums (in %).

	Distillate fraction (420-500 °C) at —15 °C	Residue fraction (above 500 °C) at 0° C
Feed		
Stock	100.0	100.0
Products		
Dewaxed oil	76.0	65.0
Gatch or petrolatum	23.0	34.0
Losses	1.0	1.0
Total	100.0	100.0

The capacity of a plant is about 210 000 tonnes a year using residue stock and 240 000 tonnes a year using distillate stock. In other words, the capacity of dewaxing plants using distillate stock is 25-30% higher than that of plants using residue stock, while the

rate of filtration (relative to the oil) depending on the type of petroleum is correspondingly higher by 25-40%.

Equipment. An *ammonia crystallizer* (Fig. 95) is a tubular cooler. The liquid ammonia flowing into the external pipes from an overhead tank evaporates, and its vapour via discharging headers again gathers in the upper part of the tank, whence it is sucked into the cooler section. The stock solution being cooled is fed into the internal pipes. To prevent the separating gatch from adhering to the

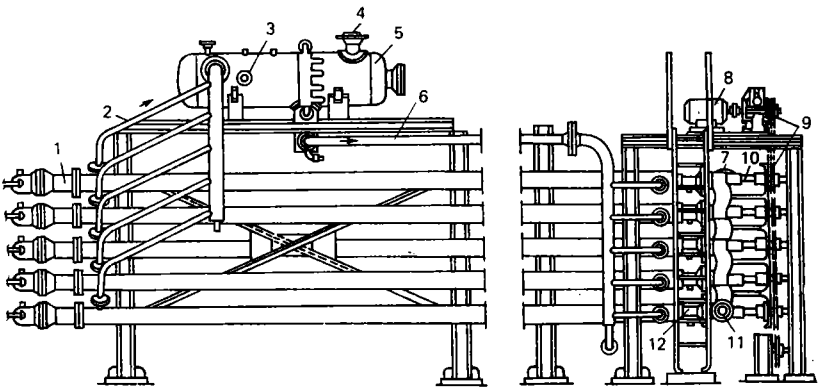

Fig. 95. Ammonia crystallizer:

1—ammonia pipes (external); *2*—pipes for feeding ammonia vapour from apparatus into tank; *3*—connection for feeding liquid ammonia into tank; *4*—connection for discharging ammonia vapour; *5*—ammonia tank; *6*—header for feeding ammonia into crystallizer pipes; *7*—connection for feeding in stock solution; *8*—electric motor; *9*—coupling of shaft drive; *10*—shaft with scrapers; *11*—connection for discharging stock solution; *12*—product pipes (internal)

walls, a shaft with scrapers is installed inside each pipe. All the shafts are driven by an electric motor.

In *regenerator crystallizers*, a solution of dewaxed oil is fed into the external pipes.

Given below are brief specifications of an ammonia (I) and regenerator (II) crystallizers.

	I	II
Cooling surface, m^2	70	85
Heat transfer coefficient, $W/(m^2 \cdot K)$	176-230	50-140

A *drum vacuum-filter* (Fig. 96) is a continuous apparatus with a filtering surface area of 50 m^2, a drum diameter of 3 m, and a length of 5.4 m. The drum speed is 0.21-0.5 rpm. The level of the liquid in the housing should be such that 60% of the drum surface is immersed in it. Approximately every 30-36 hours, the filter fabric is washed with the hot solvent.

Process Control and Regulation. Normal operation of a plant requires that a constant stock temperature be maintained at the

inlet to the filters. This temperature ahead of the first stage filters is determined by the rate of flow of the ammonia into the ammonia crystallizers. The product temperature ahead of the second stage filters depends on the temperature of the solvent supplied for diluting the first stage gatch and of the solvent used for washing in the first and second stages. The stock level in the filters is regulated by valves on the lines feeding the stock from the tank into the relevant filter.

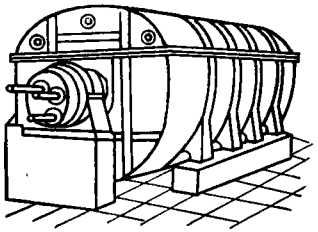

Fig. 96. General view of drum vacuum-filter

Safety Precautions. The dewaxing solvents and ammonia are explosive and toxic. This is why the equipment and pipelines must be sealed. The tanks for storing the solvent and filtrate solutions, and also the filters, are fed with an inert gas to prevent the formation of an explosive vapour-air mixture.

Technical and Economical Indices. The approximate technical and economical indices per tonne of dewaxed oil with a pour point of —15 °C are as follows:

Toluene, kg	1.5	Ammonia, kg	0.05
Methylethylketone, kg	2.0	Steam, GJ	50-54
Benzene, kg	1.5	Circulation water, m³	51.7
Inert gas, kg	2.9	Electrical energy, MJ	720

Arctic and transformer oils with a pour point of —60 °C are produced in a deep dewaxing process. Here two cooling stages are used. Ammonia is used in the first stage, and liquefied ethane in the second.

10.7. Adsorption Treatment

The adsorption treatment of oils is based on the ability of adsorbents to selectively extract resinous and sulphur-containing compounds, unsaturated and polycyclic arenes, and also organic acids, residues of sulphuric acid and solvents from oils. The treatment improves the colour of the oil, its stability, viscosity index, and carbon residue.

Natural clays (bleaching earths) and artificial aluminosilicates are used as adsorbents in the treatment of oils, as in the treatment of fuels. Natural clays are activated with sulphuric or hydrochloric acid and dried prior to use.

In oil (and paraffin wax) production technology, adsorbents are used most widely for **final purification** of the products from residues of undesirable components such as salts of naphthenic and sulphoacids, acid tars, sulphuric acid, selective solvents, and resins.

The following treatment methods are employed in the industry: (1) contact treatment with a finely comminuted adsorbent, and (2) percolation or filtration through a bed of a granulated adsorbent.

10.7.1. Contact Treatment

In contact treatment, oils are mixed with finely comminuted bleaching earth. Since the activity of the adsorbent depends on the degree of its comminution, very finely ground clay is used. To lower the viscosity of the oil and improve its penetration into the adsorbent pores, the oil is heated.

The process temperature depends on the quality of the stock, the nature of the adsorbent, and the required degree of product purification.

Most often, light distillate oils are subjected to contacting at 80-120 °C, middle ones—at 140-170 °C, and residue oils—at 180-220 °C. The efficiency of the process is also affected by the duration of contact of the oil with the clay. This time is generally 20 to 25 minutes.

The merits of the process include the possibility of easily regulating the degree of purification determined by the product colour by changing the process temperature and the adsorbent-to-oil ratio. The feed stock is treated continuously, and the harmful impurities are all extracted immediately. The shortcomings of the process include the difficulty of regenerating the adsorbent, the losses of oil with the adsorbent (30-40% of the latter), and partial decomposition of the oil because the natural aluminosilicates exhibit cracking properties at high temperatures. Moreover, sometimes contact treatment does not yield oil of a sufficiently high quality with respect to its colour. The adsorbent is not regenerated at the plant.

Flow Diagram. The flow diagram of a contact oil treatment plant is shown in Fig. 97 (washing of the adsorbent with a solvent is not shown in the figure). The oil fed to the plant for final treatment is delivered by pump *1* via exchanger *2* into dust preparing unit *3*, where the adsorbent is dosed into the oil stream. The oil and clay mixture flows into mixing chamber *4* provided with a turbomixer. From chamber *4*, pump *5* feeds the mixture into pipe heater *6* and thence into evaporating column *7* in which water, oil decomposition products, residues of selective solvents, and decomposition gases are evaporated from the oil and clay. Steam is introduced into the bottom of column *7* to improve evaporation and mixing of the suspension.

The overhead distillate vapour from the top of column *7* is directed into distillate condenser *8*, where it is cooled to 105 °C. Only the hydrocarbons condense. The condensate and steam flow into separator *11* from whose bottom pump *10* recycles part of the liquid

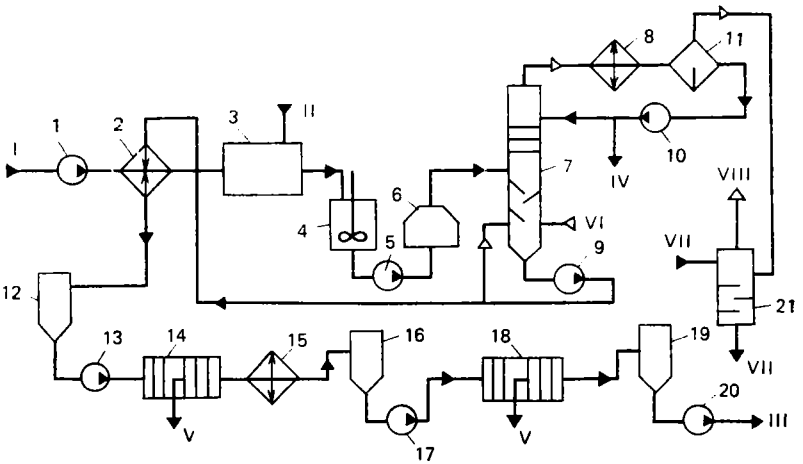

Fig. 97. Flow diagram of contact oil treatment plant:

1, 5, 9, 10, 13, 17, 20—pumps; *2*—heat exchanger; *3*—dust preparing unit; *4, 12, 16*—mixing chambers; *6*—pipe heater (furnace); *7*—column; *8, 21*—condensers; *11*—separator; *14, 18*—filters; *15*—cooler; *19*—tanks; *I*—feed stock; *II*—clay; *III*—treated oil; *IV*—overhead distillate; *V*—clay to dump; *VI*—steam; *VII*—water; *VIII*—condensed gases

distillate as a reflux to column *7*, while its major amount is withdrawn from the plant. The steam from the top of separator *11* flows into water-cooled mixing condenser *21*, condenses, and is discharged into the sewerage system.

From the bottom of column *7*, the suspension of the adsorbent in oil is partly recycled by pump *9* to column *7* to prevent precipitation of the clay from the oil. The other part is directed through exchanger *2* into pneumatic mixing chamber *12*, whence pump *13* feeds it onto disk filter *14*. Here coarse separation of the clay from the oil is performed. The oil via cooler *15* flows into pneumatic mixing chamber *16*, whence pump *17* forces it through frame filter *18* for fine filtration of the clay from the oil. The oil from filter *18* flows into tank *19*, whence pump *20* withdraws it from the plant. The clay is periodically removed from the filters and is directed either for adsorbent regeneration or into the dump.

Technological Conditions. The technological conditions of the plant are as follows:

Temperature, °C:	
feed stock after exchanger *2*	80
suspension of oil and clay after heater *6*	135-160
at top of column *7*	120-140
oil suspension after exchanger *2*	95-120
ditto after cooler *15*	110
Residence time of oil suspension in heater, min	6-7
Consumption of clay, % of feed stock:	
when treating distillate oils	3-10
when treating residue oils	10-25

To reduce the losses of oil entrained with the clay, the latter is usually washed with a solvent such as heavy gasoline.

Material Balance. The material balance of the contact treatment of distillate and residue oils (in %) is given below.

	Distillate oil	Residue oil
Feed		
Oil	100	100
Dry clay	5	10
Solvent	2	2
Total	107	112
Products		
Purified oil	95	91.5
Washed oil	3.8	7.8
Overhead distillate	1.0	0.2
Solvent	2.0	2.0
Water	0.5	1.0
Clay to dump	4.7	9.5
Total	107	112

Equipment. The *turbomixer* (Fig. 98) intended for obtaining a single-phase mixture of oil with clay is a cylindrical welded steel apparatus 5 m high and 2.2 m in diameter provided with a mixing device. The mixer accommodates a vertical shaft with four blade turbine wheels rotating clockwise inside of stationary vane rings. When the turbomixer is running, a turbulent motion of its contents is produced. The turbomixer is driven by an electric motor mounted on its lid.

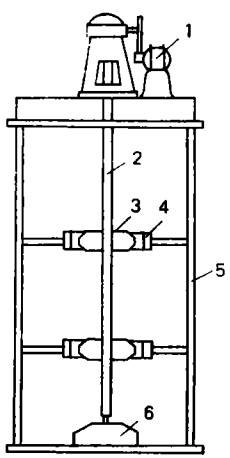

Fig. 98. Turbomixer:
1—electric motor; *2*—shaft; *3*—turbine wheels; *4*—vane rings; *5*—mixer body; *6*—shaft thrust bearing

The *disk filter* is intended for the coarse filtration of the oil from clay. The oil is filtered under a pressure of 0.3-0.4 MPa produced by a pump. In its design, the disk filter press is a horizontal steel cylinder consisting of an upper and lower halves. The lower half is rigidly secured on uprights, while the upper one can swing back on hinges. Secured inside to the upper lid are 36 filtering elements (disks) 900 mm in diameter consisting of a hoop onto both sides of

which a coarse-mesh iron screen, a fine-mesh iron screen, and monel-metal fabric are stretched. There is a discharge pipe inside the disk. The oil mixed with clay is fed into the housing, whence it penetrates into the disks and is discharged along the pipes into the oil header.

The *frame filter press* is intended for the complete extraction of the most minute clay particles from the oil. Paper and fabric are the filtering surfaces.

The *evaporator column* is equipped with seven rectification plates. A feature of the column is its tapered bottom end plate ensuring complete discharge of the clay from the apparatus.

Technical and Economical Indices. The approximate technical and economical indices per tonne of purified oil are given below.

Adsorbent, kg	30-200
Steam, GJ	155-210
Circulation water, m^3	2.1-2.8
Electrical energy, MJ	19.8-23.4
Fuel, kg	0.1-0.3

10.7.2. Percolation Method

Filtration is performed through a layer of granulated adsorbent when the latter is either stationary or moving. In the first case, the pure oil or oil dissolved in heavy gasoline is filtered through a fixed bed of clay with particles from 0.3 to 2 mm in size.

The filter is a vertical hollow cylindrical apparatus packed with the adsorbent. The first portions of oil are purified very deeply. As the adsorbent becomes saturated with the substances extracted from the oil, the extent of purification drops. The entire filtrate is gathered in one tank and mixed. Its quality therefore becomes averaged. Upon the completion of filtration, the adsorbent is washed with a solvent (heavy gasoline) to extract the residual oil from the filter. Next the filter is treated with steam to remove the solvent. After washing and stripping, the adsorbent is discharged and replaced with a fresh one.

The main shortcoming of percolation on a fixed adsorbent is its labour-consuming and cumbersome nature. Its main merit is the mild conditions of treatment at temperatures from 20 to 100 °C and the absence of decomposition of the oil hydrocarbons. The method is mainly used for the finish (final treatment) of oils.

The continuous process of adsorption treatment and finish of oils with the use of a solvent is conducted in a counterflow on a moving synthetic aluminosilicate adsorbent with a grain size of 0.25-0.8 mm. The solvent is an 80-120 °C gasoline fraction containing from 3 to 5% of arenes. In the adsorption stage, the solvent is employed for lowering the viscosity of the oil, while in the washing stage it is a desorbent. The adsorbent is subjected to continuous oxidation regeneration directly at the plant.

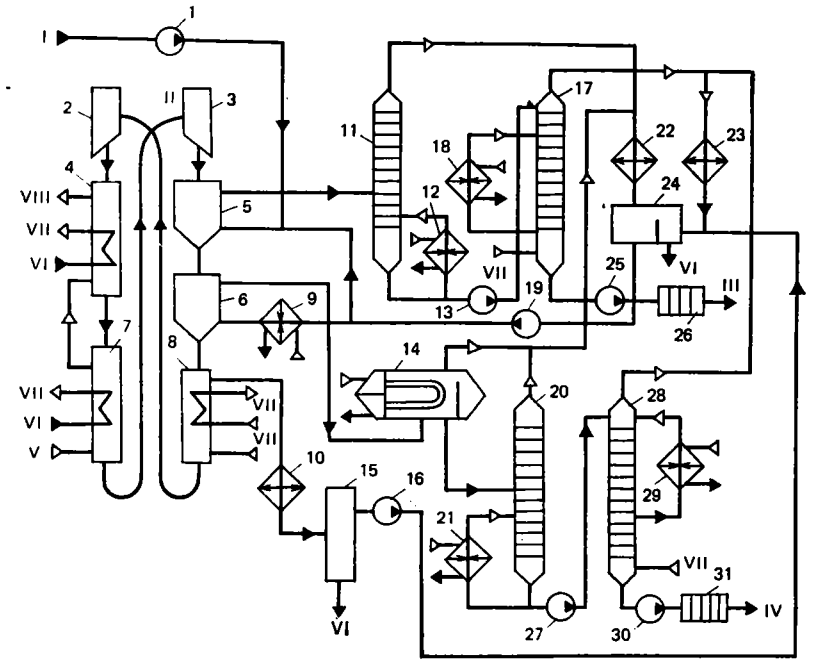

Fig. 99. Flow diagram of continuous oil adsorption treatment plant: *1, 13, 16, 19, 25, 27, 30*—pumps; *2, 3*—separator bins; *4*—regenerator; *5*—adsorber; *6*—desorber; *7*—cooler; *8*—drier; *9, 18, 21, 29*—steam heaters; *10, 22, 23*—coolers; *11, 17, 20, 28*—columns; *12, 14*—boilers; *15, 24*—tanks; *26, 31*—filters; *I*—feed stock; *II*—adsorbent; *III*—raffinate-1; *IV*—raffinate-2; *V*—air; *VI*—water; *VII*—steam; *VIII*—flue gases

The results of the finish of raffinates produced in the selective treatment of distillate and residue oils of sour petroleums using a moving adsorbent are given in Table 17.

Flow Diagram. Figure 99 gives a flow diagram of a continuous oil adsorption treatment (finish) plant with oxidation regeneration of the adsorbent.

The feed stock and solvent are mixed at the inlet to the bottom part of adsorber *5*, the solution moving upward, while the circulating adsorbent is admitted into the adsorber at the top and flows downward in counterflow to the stock solution. The adsorbent extracts resins and polycyclic arenes from the stock. The solution of the treated oil (the raffinate-1 solution) from the top of adsorber *5* is directed for regeneration of the solvent performed in two stages in columns *11* and *17*.

The suspension of the adsorbent saturated with the extracted substances in the solvent flows downward from adsorber *5* into desorber *6* where it is scrubbed by the ascending stream of warm solvent fed into the bottom part of desorber *6*. The warm solvent displaces the

Table 17. **Characteristic of Oils from Sour Petroleums before and after Finish with an Adsorbent:Stock Ratio of 0.5:1**

Indices	Distillate oil after phenol treatment		Residue oil after phenol treatment		Residue oil after furfural treatment	
	initial	after finish	initial	after finish	initial	after finish
Oil yield, %	—	91.5	—	94.0	—	91.5
Viscosity at 100° C, mm^2/s	10.6	10.1	19.7	18.5	25.8	22.3
Viscosity index	80	85	85	90	81	83
Carbon residue, %	0.29	0.10	0.55	0.30	0.8	0.46

aromatized raffinate-2 from the surface of the adsorbent. The raffinate-2 solution is withdrawn from the top of desorber *6* and is distilled in three stages to remove the solvent, this being done in boiler *14* and columns *20* and *28*.

From the bottom of desorber *6*, the adsorbent suspension saturated with resins flows over into steam drier *8* with a fluidized bed, where the solvent is stripped from the adsorbent with steam.

A pneumatic system feeds the dried adsorbent into pneumatic suspension separator bin *2*, whence it flows into step-counterflow regenerator *4*. Here the resin is burned out from the adsorbent surface. Air is delivered into the bottom of regenerator *4* in counterflow to the adsorbent. The flue gases flow from the top of regenerator *4* into a waste-heat boiler.

From the bottom of regenerator *4*, the regenerated adsorbent is directed into cooler *7* with a fluidized bed. Here it is cooled by giving up its heat to water flowing through a coil, and also to the air fed into regenerator *4* via cooler *7*. A pneumatic system feeds the adsorbent from the bottom of cooler *7* into pneumatic suspension separator bin *3*, whence it is again directed into adsorber *5*.

Technological Conditions. The technological conditions of a plant are as follows:

	Distillate oil	Deasphaltizate
Ratio:		
adsorbent:stock in treatment	2:1	(3-4):1
ditto in finish	0.2:1	(0.25-0.5):1
solvent:stock for dilution	1:1	1:3
adsorbent:solvent for desorption	1:2	1:2
Temperature, °C:		
adsorption	40-45	
desorption	75-80	
adsorbent drying	150	
burning out of resins	650	
Pressure of process, MPa	0.1-0.14	

Material Balance. The material balance of a continuous oil adsorption treatment plant (in %) is given below.

	Treatment of distillate oil	Treatment of deasphaltizate	Finish of distillate and residue oils
Feed			
Stock	100	100	100
Products			
Raffinate-1 (treated oil) .	72.7	65.7	94.0
Raffinate-2 (aromatized product)	16.8	18.8	6.0
Burnt out resins and losses	10.5	15.5	—
Total	100.0	100.0	100.0

Unlike the selective treatment extracts, the raffinate-2 contains no resinous substances and consists of highly concentrated arenes and their derivatives, including sulphur-containing arenes. The latter are used as fillers and plasticizers in the production of rubber, heat-carrying agents, gas-resistant capacitor oils, and also as component in the preparation of additives.

Technical and Economical Indices. The approximate technical and economical indices per tonne of treated oil (in the treatment of deasphaltizates) are as follows:

Adsorbent, kg	2.3	Water, chemically purified, m^3	4.0
Solvent, kg	163	Electrical energy, MJ . .	550
Steam, GJ	2514		
Circulation water, m^3 . . .	178.0		

10.8. Sulphuric-Acid and Alkali Treatment

Commercial oils from the distillate and residue fractions of Baku and Emba oils containing insignificant amounts of resins are still produced in the industry by sulphuric-acid treatment, leaching, and contact treatment with bleaching earths.

10.8.1. Sulphuric-Acid Treatment

Treatment with sulphuric acid removes resinous and asphaltenic substances, unsaturated hydrocarbons, naphthenic acids, partly nitrogen- and sulphur-containing compounds, and polycyclic arenes from the lubricating oil fraction.

An oil fraction treated with sulphuric acid separates into two layers. The bottom one—acid tar—consists of reaction products, excess acid, the compounds dissolved in the acid, and oil mechanically entrained into the bottom layer. The top layer—acid oil—consists of the oil fraction hydrocarbons, and also an insignificant amount of

the acid reaction products soluble in oil. A small amount of the sulphuric acid is also entrained by the oil.

The parameters of sulphuric-acid treatment (and also of alkali treatment and washing with water), which depend on the chemical composition and viscosity of the stock and on the required quality of the treated product, are selected in each case experimentally.

The treatment results depend on the treatment temperature, duration of oil and acid contact, the concentration and amount of the sulphuric acid, and on how it is introduced.

Treatment Temperature. Oils should be treated with sulphuric acid at the lowest possible temperatures. Elevation of the temperature boosts the reaction of sulphoacid formation that causes major losses. Moreover, the dissolving of tar in the acid oil increases at a higher temperature, which detracts from the colour of the commercial product. The acid tar becomes solid and brittle owing to the transformation of the resins into asphaltenes, and it is difficult to drain it off through the bottom connection of the apparatus.

But it is difficult to treat viscous oils at low temperatures owing to the poor mixing of the acid with the oil and poorer conditions of precipitation of the acid tar.

The treatment is performed at the following temperatures in practice:

Oil viscosity at 50 °C, mm^2/s . .	18-25	10-17	6-9	3-5	2-2.5
Treatment temperature, °C . . .	55-60	45-50	40	30-35	20-25

Concentration and Consumption of Acid. The sulphuric acid used for treatment has a concentration from 92 to 96%. The activity of the acid lowers substantially when its concentration is below 90%. Fuming acid causes the increased formation of sulphoacids. It is employed only for the production of colourless (medicinal, perfumery) oils. The concentration of the acid drops as a result of the treatment. Acid tar contains from 25 to 70% of unreacted sulphuric acid.

The consumption of sulphuric acid for treatment depends both on the quality of the feed stock and on the required degree of purification. The colour of the oil improves when more acid is used. The consumption of acid in the treatment of distillate oils is 3-10%, while in the treatment of residue oils it grows to 15-20%. The consumption of fuming sulphuric acid for the treatment of perfumery and medicinal oils reaches 50-60%.

Procedure of Acid Treatment. The treated product usually contains moisture that dilutes the acid and lowers its efficiency. This is why the oil is dried before treatment, using for this purpose 0.25-2% of the same sulphuric acid as for treatment. After drying, the acid residual stock is removed, and the oil is treated with portions of acid of 3-4%, the acid residual stock being thoroughly precipitated and

separated each time. Residue oils are treated in one stage owing to the poor precipitation of the acid residual stock.

Duration of Contact. The duration of contact depends on the intensity of mixing and the conditions of acid residual stock removal. When mixing takes place too long, the acid residual stock partly dissolves in the oil. In apparatus with a capacity of 25-100 tonnes, mixing continues from 30 to 70 min.

The settling time of the acid residual stock should be as short as possible (from four to eight hours when precipitants are used). Consequently, the treatment temperature is chosen with a view to the viscosity of the medium. Precipitation is accelerated by employing coagulants such as a 6-9% sodium hydroxide solution, a liquid glass solution, or cold water. These substances are added after termination of mixing of the oil with the acid.

Equipment. The main apparatus is a cylindrical tank with a conical end plate from 25 to 250 m^3 in capacity. Air is used for mixing. The apparatus is outfitted with a steam jacket in its conical part.

10.8.2. Alkali Treatment

Acid oil contains sulphoacids, traces of sulphuric acid, and petroleum acids. These substances can be removed from distillate oils by neutralization with a 3-10% solution of an alkali, preferably sodium hydroxide. The process temperature is 45-50 °C. The acidic substances contained in the oil form salts and pass over into the alkali solution. After separation of the alkaline residues, the oil is scrubbed with hot steam condensate for removing the residues of the petroleum acid salts (soaps) and is dried with air. The alkali consumption is 0.2-1.5% of the acid oil, the oil losses being 2-5%.

Alkali neutralization cannot be used for highly viscous distillate oils and for residue oils owing to the formation of stable emulsions. Acid viscous oils are neutralized in contact treatment with bleaching earths.

The leaching process can be a batch or continuous one.

A batch process is conducted in an alkali mixer. Unlike their acid counterparts, alkali mixers have an internal protective layer made from vinyl plastic or diabasic tiles because the weakly acidic medium of the oil causes increased corrosion.

A continuous process is conducted at a pressure of 0.6-1.0 MPa. The advantages of a continuous process over a batch one are the much better separation of the oil from the alkaline effluents and the lower production losses.

Flow Diagram. Figure 100 presents a flow diagram of a continuous alkali oil treatment process.

The stock is fed by pump *1* into exchanger *2*, is heated to 50 °C, and flows into furnace *5*, which it leaves with a temperature of

150-170 °C. It is next contacted in mixer *7* with a 1-2.5% alkali solution delivered by pump *6*. The mixture is directed into settling tank *8* where the oil separates from the soaps and alkali. The alkaline residues under their own pressure flow after cooler *9* at 70 °C into tanks for the subsequent separation of petroleum acids.

From the top of settling tank *8*, the leached oil at 130-140 °C flows into mixer *10*; the latter is also supplied with water at 60 °C by pump *11*. The water and oil mixture separates in settling tank *12* from whose bottom the washing water via cooler *13* at 70 °C flows into a tank for the subsequent separation of petroleum acids.

The leached and scrubbed oil flows from the top of settling tank *12* into heat exchanger *2*, where it is cooled by the feed stock to 80 °C,

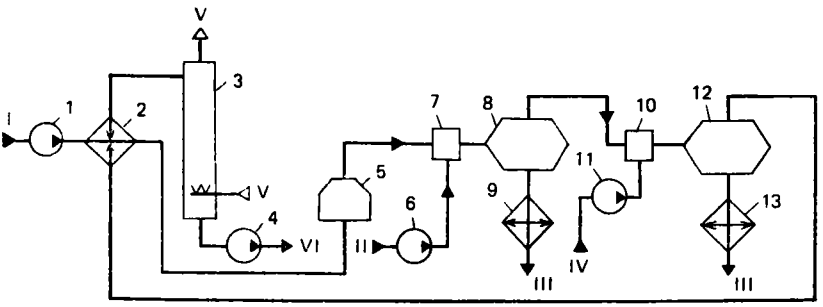

Fig. 100. Flow diagram of a continuous alkali oil treatment plant:
1, 4, 6, 11—pumps; *2*—heat exchanger; *3*—column; *5*—furnace; *7, 10*—mixers; *8, 12*—settling tanks; *9, 13*—coolers; *I*—feed stock; *II*—2.5% sodium hydroxide solution; *III*—alkaline residues; *IV*—water; *V*—air; *VI*—treated oil

and then into column *3* for drying by compressed air. The leached oil from the bottom of column *3* is withdrawn by pump *4* from the plant.

The process of acid and alkali oil treatment has a number of shortcomings in comparison with the selective method of treatment. Oils treated with sulphuric acid have a lower (by 10-12 units) viscosity index. Only 40-50% of the acid is used efficiently. The acid residual stock has not found sufficient application. The losses of oil with the acid residual stock are quite appreciable. They are 3-10% for distillate and 25-30% for residue oils.

10.9. Hydrofining and Hydrocracking

The goal of lubricating oil hydrofining is to improve the colour and stability, increase the viscosity index somewhat, and substantially lower the sulphur and coke content. The hydrofining of oils can be efficiently combined in various ways with the main processes

of oil production depending on the quality of the feed stock and the requirements to the product oils. Generally, oils are subjected to hydrofining after treatment with selective solvents. In this case, hydrofining is employed instead of treatment with bleaching earths (what is called hydrofinish of oils).

Dewaxed oils from distillate raffinates after phenol and furfural treatment, and also dewaxed oils from residue fractions after deasphalting with propane and phenol treatment are subjected to hydrofining.

Moreover, positive experience has been gained in employing hydrofining before and instead of selective treatment. Industrial oils, for example, from the Eastern petroleums of the Soviet Union, produced by treatment with selective solvents, do not have the required stability to oxidation. The use of hydrogenation, conversely, produces a highly stable oil in this case. Oils treated with selective solvents have a more uniform composition, and they contain less sulphurous compounds, resins, and polycyclic arenes than untreated products with the same boiling range. This necessitates the conducting of hydrogenation of the raffinates under milder conditions.

Hydrogen sulphide, hydrocarbon gases, and the overhead distillate (EBP below 350 °C) are by-products of hydrofining. The hydrogen sulphide is employed for the production of sulphur or sulphuric acid, the hydrocarbon gases are used as fuel directly at the plant, while the overhead distillate is added to the fuel oils to lower their viscosity.

A characteristic of oil distillates before and after hydrofining is given in Table 18.

Inspection of Table 18 reveals that hydrofining increases the viscosity index somewhat and lowers the carbon residue and the sulphur content.

Table 18. **Results of Motor Oil Hydrofining**

Indices	Oil ДС-8		Oil ДС-11		Residue oil	
	initial	treated	initial	treated	initial	treated
Viscosity at 100 °C, mm^2/s	8.3	7.9	10.5	9.7	21	20.8
Viscosity index	85	88	82	84	—	—
Sulphur content, %	1.1	0.6	1.1	0.7	1.0	0.8
Carbon residue, %	0.16	0.1	—	—	0.45	0.27
Colour (according to KH-51 instrument, 15:85), mm	35	98	22	80	6.5*	3.1*

* The colour is in NPA grades.

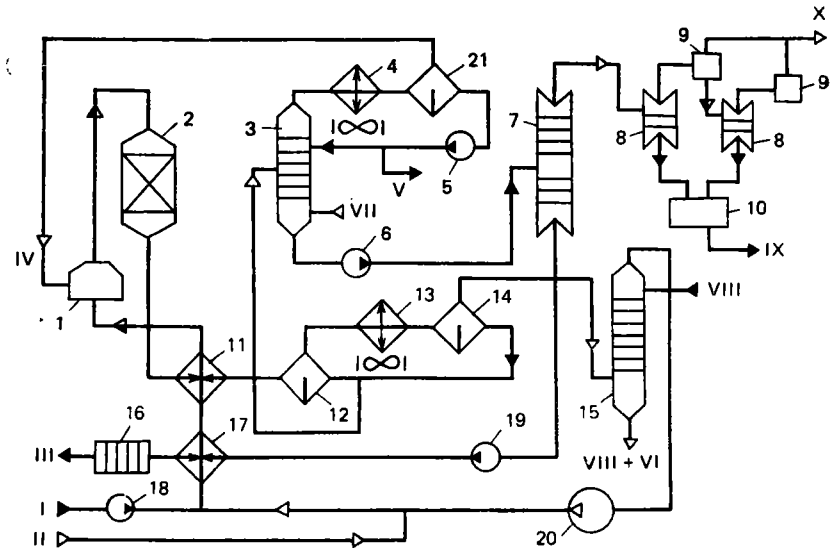

Fig. 101. Flow diagram of an oil hydrofining plant:
1—furnace; *2*—reactor; *3*, *7*, *15*—columns; *4*, *13*—coolers; *5*, *6*, *18*, *19*—pumps; *8*—barometric condensers; *9*—ejector; *10*—barometric well; *11*, *17*—heat exchangers; *12*, *14*, *21*—separators; *16*—filter; *20*—compressor; *I*—feed stock; *II*—hydrogen-containing reforming gas; *III*—hydrofined oil; *IV*—hydrocarbon gas; *V*—overhead distillate; *VI*—hydrogen sulphide; *VII*—steam; *VIII*—monoethanolamine; *IX*—water; *X*—uncondensed gases

The Soviet industrial oil hydrofining plants have three parallel streams each with a capacity of 120 000 tonnes a year. The streams can process either identical or different feed stock simultaneously. Each stream consists of two parts, namely, (1) an oil hydrofining and catalyst regenerating unit, and (2) a unit for removing hydrogen sulphide from the circulating gas.

Flow Diagram. Figure 101 presents a flow diagram of an oil hydrofining plant for one stream.

The diagram of the plant's reactor unit, except for the two-stage separation of the mixture of the product with the circulating gas (hot in separator *12* and cold in separator *14*) does not differ from that of the reactor unit of diesel fuel hydrofining. Stabilization of the hydrogenate consists of the following operations.

The hydrogenate from separators *12* and *14* flows by gravity into stripping column *3*, where the light fractions and the main part of the hydrogen sulphide is distilled with steam. The light fractions and gases from the top of column *3* condense in condenser and cooler *4* and are separated in separator *21*, whence the gas is fed into the furnaces of the plant as fuel. Pump *5* withdraws the light product from the plant, while part of it is used as a direct reflux in column *3*.

The moisture-containing oil from the bottom of column *3* flows into vacuum-drying column *7* in which the vacuum is maintained by a two-stage air ejector *9*. The hydrofined oil from the bottom of column *7* is fed by pump *19* through heat exchanger *17* and frame filter *16*. The latter separates the catalyst dust. The refined oil is directed from the plant to the refinery's product farm.

Technological Conditions. A pelletized fixed-bed alumino-cobalt-molybdenum or alumino-molybdenum catalyst is used in the process. Below are given the technological conditions of the process:

Space velocity, h^{-1}	1.5-2
Circulation turnover of hydrogen-containing gas, m^3/m^3	125-300
Temperature, °C:	
in reactor	250-300
in separator *12*	200-240
in separator *14*	40
in column *3*	195-235
Pressure, MPa:	
in reactor	3.5-40.0
in column *3*	0.14
in column *7*	0.0133
Steam consumption, % of column feed stock	5-8

The catalyst is regenerated by the gas and air method under the following conditions:

Temperature, °C	550
Pressure, MPa	4.0
Duration of burning out, h	30

Material Balance. The material balance of hydrofining the distillate and residue oil fractions of sour petroleum (in %) is as follows:

	Light and middle distillate oils	Residue oils
Feed		
Oils	100.00	100.00
Hydrogen, 100% (for reaction)	0.93	1.25
Total	100.93	101.25
Products		
Oils	90.00-98.50	97.50
Hydrocarbon gases	0.63	0.85
Hydrogen sulphide	0.16-0.27	0.36
Overhead distillate	0.64-1.03	2.04
Losses	0.50	0.50
Total	100.93	101.25

Equipment. A *hydrofining reactor* is a cylindrical apparatus with spherical end plates 12.83 m high and 1.3 m in diameter. The reactor wall is made from two-layer steel. The catalyst is laid in a continuous bed 9.4 m high. One reactor is installed in each stream.

The *pipe furnaces* are designed with surface-combustion panel burners and are intended for a thermal stress of the radiant pipes of 17-20 kW/m^2.

Production of Oils from Hydrofined Stock. The efficiency of the existing processes of selective treatment of oil stock is not always adequate owing to the removal of a considerable part of the valuable hydrocarbons with the undesirable components, especially when producing oils with a viscosity index of 90 and higher. Studies have shown that the preliminary hydrofining of oil distillates and the deasphaltizates of residue oils on conventional hydrofining catalysts makes it possible to substantially improve the operation of the selective treatment plants.

Technical and Economical Indices. The approximate technical and economical indices per tonne of hydrofined oil are as follows:

Hydrogen, 100%, kg	3-5	Water, m^3	7-10
Catalyst, kg	0.045-0.078	Electrical energy, MJ	288.8-378
Steam, MJ	213.7-276.5	Fuel, kg	14-16

Hydrocracking of Oil Feed Stock. The catalytic hydrocracking process, also called deep hydrofining, is used instead of the selective treatment processes or parallel with them. The goal of hydrocracking is the production of base oils with a viscosity index of 95-105 or even 110-125. Below are indicated the approximate hydrocracking conditions in the production of oils:

Temperature, °C	370-425
Pressure, MPa	14-20
Space velocity, h^{-1}	0.4-1.2
Hydrogen-containing gas to stock ratio, m^3/m^3 (at 0 °C and 0.1 MPa)	600-1500

Unlike the selective treatment of oil feed stock in which the undesirable components are removed by a solvent, in hydrocracking they undergo chemical transformations. The condensed polycyclic arenes and heterogenic compounds are hydrogenated, the polycyclic cycloalkanes are decomposed and hydrogenated, and the normal alkanes are isomerized. As a whole, the group composition changes favourably.

Hydrocracking oils are a high-grade base of commercial all-purpose (all-season) engine oils, and also of a number of power engineering and industrial oils. The yield and quality of hydrocracking oils depend on the quality of the feed stock, the nature of the catalyst, and the conditions of the process. As a whole, however, the viscosity of the oils is considerably lower than that of the feed stock, while the viscosity index is higher. The yield of oils does not generally exceed 70% of the feed stock, while in the production of oils with a viscosity index exceeding 110, their yield is 40-60%.

10.10. Collecting and Regenerating Waste Oils

Oils in the process of their use change their service properties as a result of decomposition and oxidation. Fuel and water get into the oil. The acidity, ash content, and carbon residue grow, resins and sludge appear; the viscosity, viscosity index, and flash point lower; and the oils become darker. The additives in the oil decompose. It has been established that here 70-80% of the valuable hydrocarbons of oil are still contained in waste oil, and they should be utilized.

The need and expediency of collecting waste oils is obvious because the petroleum raw material is used much more rationally and protection of the environment is improved.

In the USSR, the collection of waste lubricating engine, industrial, and power-engineering oils is regulated by the relevant decrees and edicts approved by the USSR Council of Ministers. Enterprises having no regenerating plants hand in waste oils to petroleum marketing organizations. The quotas for collecting waste oils (in per cent of the use of fresh oils) ranges from 3 to 25% for various enterprises and various grades of oil. Practice has shown that these quotas can easily be overfulfilled with the proper and efficient organization of oil collection. Good results are given by a system in which fresh oil is released only provided that a certain amount of waste oil is handed in.

Definite rules must be observed in the collection of waste oils: the oils are collected separately by grades; greatly contaminated oils are collected separately; contamination of the oils by greases must never be tolerated. The special implements such as pails, funnels, cans, trays, and barrels must be clean. It is good to mark the implements and vessels for collecting, transportation, and storage of waste oils with an indication of the grade of waste oil they are intended for.

The choice of the method of regenerating waste oils is determined by the nature of the contaminants and ageing products they contain. Some oils require only purification from mechanical impurities, while others require deep purification with the use of chemical and physicochemical methods.

The physical methods of regeneration include ones of removing dust, sand, metal particles, water, coke, coal, and combustible substances. The most popular physical methods include settling, centrifugation, filtration, distillation of the light fractions, and scrubbing with water to remove the water-soluble acids.

Of the physicochemical and chemical methods, adsorption treatment is employed as an independent method, or sulphuric acid, alkali, and adsorption methods of treatment are combined. In connection with the increased content of additives in oils and an increase in the production of high-index oils, the methods of regeneration become more involved, and they include treatment with selec-

tive solvents and hydrofining. Industrial oils are usually regenerated following a simpler scheme than motor, transformer, turbine, and compressor oils. Additives are incorporated into regenerated oils, and they are sometimes mixed with fresh oils.

Chapter 11

PRODUCTION OF PETROLEUM PRODUCTS FOR VARIOUS PURPOSES

11.1. Solid Paraffin Waxes and Ceresines

A major part of the commercial waxes are produced at petroleum refineries when processing the diesel and lubricating oil fractions of paraffinic petroleums. Solid waxes are obtained in the dewaxing of distillate oils, and ceresine in the dewaxing of residue oils. Ceresine is also produced in the processing of ozokerite by melting out the organic part, distillation of the light part, and removal of resinous substances from the solid residue. At present, the industry produces waxes (USSR State Standard GOST 23 683-79) and ceresine (GOST 2488-79). The melting point of waxes is of the order of magnitude of 50-58 °C, and the drop point of ceresines is 57-80 °C. Waxes (except for their grades intended for synthesis and matches) are a white odourless mass. An oil content from 0.5 to 5% is tolerated for various grades of waxes. The presence of benzpyrene is not tolerated in waxes for the food industry.

Waxes are separated from petroleum fractions (1) by direct cooling, and (2) by cooling with the use of selective solvents.

To produce wax in the first way, a distillate oil fraction containing 20-30% of alkanes and having a viscosity at 50 °C of not over 9-11 mm^2/s is cooled in coolers and crystallizers, generally in two stages. The heated distillate is preliminarily cooled in the first stage to 12-16 °C, and the separated solid hydrocarbons are removed by filtration. In the second stage, the first stage filtrate is cooled to 2 °C, and the solid hydrocarbons are again separated. The solid product of both stages is combined. It is unpurified wax requiring further treatment and is called **gatch**.

The second way (see Sec. 10.6) also makes it possible to produce gatch from distillate oils, and petrolatum—a raw material for producing ceresine—from residue oils.

Gatch and petrolatum contain a substantial amount of oil, therefore to produce commercial wax and ceresine they must be deoiled. Deoiling can be performed either by sweating or with the use of selective solvents.

Wax Deoiling by Sweating. Sweating is a batch process conducted in special thermally insulated chambers (sweaters) having steam

coils along their walls. The chambers accommodate sweating apparatus consisting of shallow rectangular iron plates 12 × 3 × 0.2 m in size placed one above another. The bottom of each plate is an inverted pyramid from whose apex a drain pipe emerges. All the drain pipes communicate with a common header. Each plate contains a horizontal metallic grid carrying a screen and a water coil. A steam coil is installed under the screen. A general view of three plates of a ten-plate sweater is shown in Fig. 102.

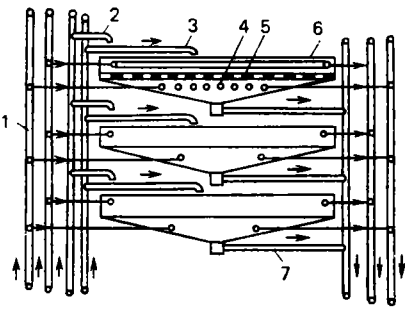

Fig. 102. Wax sweater:
1—supply of steam; *2*—pipes for feeding in molten paraffin wax; *3*—pipes for supplying water; *4*—steam coil; *5*—grate; *6*—plates; *7*—withdrawal of oil

Before beginning the sweating process, the plates are filled with water up to the grid. A layer of 15 cm of molten gatch is poured onto the water, the water coil is filled with water, and the wax is cooled to a temperature five or six degrees below the complete freezing point. The water is drained from the plates. The thin layer of wax produced is retained by the screen. The chamber is tightly closed, and it is begun to be heated at a rate of one kelvin per hour by the coils on the chamber walls up to about 40 °C (depending on the melting point of the wax). A mixture of oil and low-melting wax flows out of the gatch. This product is called **sweats**. The sweats are returned to the distillate before the first cooling stage, while the oil is completely removed together with the low-melting waxes. The remaining high-melting wax is melted by feeding steam into the steam coil and is collected in a specially heated reservoir. The yield of crude wax is about half of the amount of the gatch.

Deoiling Wax with Selective Solvents. The continuous process of deoiling gatches and petrolatums with the use of selective solvents is similar to the dewaxing of oils. What differs are the temperature conditions. The operating conditions of a plant for deoiling wax with a capacity of 260 tonnes a day are given below:

Ratio:	
solvent-to-charge before filter	(4.5-5):1
solvent-to-wax in first stage	4:1
Temperature, °C:	
solution	80
filtration:	
first stage	0-1
second stage	5-6
Pressure of solution, MPa	1.2

Material Balance. The material balance of a gatch deoiling plant (in %) is as follows:

Feed		*Products*	
Gatch	100	Wax solution:	
Solvent	500	crude wax	56
		solvent	132
		Oil solution:	
		oil residues	44
		solvent	368
Total	600	Total	600

The dewaxing of oils and the deoiling of the gatch are often combined in a single plant. After obtaining gatch in the first-stage filter of the oil dewaxing plant, it is deoiled in the second- and third-stage filters. A combination of the oil dewaxing and gatch deoiling processes makes it possible to have one solvent regeneration section and reduce the amount of equipment and the number of attendants.

The deoiled crude wax as regards its colour, smell, and the content of arenes and resinous substances does not meet the requirements of the relevant standard, therefore it has to be additionally treated in one of the following ways:

(1) sulphuric-acid treatment with subsequent finish with bleaching earths by percolation;

(2) continuous adsorption treatment on a crushed aluminosilicate catalyst;

(3) hydrofining on an alumino-cobalt-molybdenum catalyst at a pressure of 4 MPa and a temperature of 330 °C.

Additives such as polyethylene wax are employed to improve the quality of the commercial paraffin wax.

The prepared wax (liquid, match) is transported in railway tank cars or in paper bags after being cast into slabs in special moulding machines. Automatic wax bottling and packing lines are in use.

11.2. Greases

Greases have been in use during many years to reduce friction and wear in machines and mechanisms, and also to protect metals from corrosion. It has been established that consistent greases were already used in ancient Egypt 3400 years before our era. But only during the last 25 years did the production of greases grow at an enormous rate with expansion of their assortment, and their consumption increased from two to three times, reaching a million tonnes. This is explained to a considerable extent by the development of engineering and the appearance of new branches of it.

Special interest in grease is stimulated by the possibility of producing grease compositions with very diverse properties that are suitable for service under complicated operating conditions where lubricating oils are inefficient. These cases include mechanisms with a high dynamic load (gear and chain transmissions) or a high speed of rotation when oils are not retained in the friction unit, corrosive media, vacuum, and also when the lubricant must ensure the functioning of mechanisms to which it is difficult to supply lubricating oil.

The classification of greases by their fields of application and the assortment of greases produced in the USSR have been considered in detail in Sec. 3.1.

Greases, i.e. products having no fluidity at conventional temperatures, form a special class of lubricants prepared by incorporating special, chiefly solid finely dispersed thickeners into lubricating oils to limit their fluidity. Greases are colloidal systems having a space structure formed by the thickener particles. The liquid phase is kept in a semi-solid state owing to the forces of attraction of the solid particles, and is also mechanically incorporated into the thickener crystals. It has been established by electron photomicrography, and also by X-ray structural analysis that most greases have a fibrous structure. Some substances (such as water) called stabilizers improve the strength of the colloidal structure.

Raw Materials. Petroleum oils, synthetic oils, or mixtures thereof are mainly used as the liquid phase in grease production. The most popular synthetic oils are esters, polyalkyleneglycols, and organosilicon liquids. The widespread use of synthetic oils is limited by their short supply and high cost. Castor oil is the liquid phase for gasoline-resistant greases.

The properties of greases depend substantially on the nature of the thickener. Greases are divided into three main types according to this feature.

1. Greases in which solids dissolving in oils at temperatures close to their melting points and forming true solutions with the oils at their melting point are the thickeners. The latter include solid hydrocarbons such as paraffin wax, ceresine, and petrolatum. These greases, mainly employed as protective ones, have a comparatively low plastic limit that is restricted by the melting point of the thickener.

2. Greases in which solids not interacting with oils, but dispersing in them to form a colloid are the thickeners. Soaps are used for this purpose. This type includes 85-90% of all the greases produced and used at present. Several groups of these greases are distinguished depending on the soap cation.

The first one includes greases prepared with alkali metal (Na, Li) soaps. These greases are stable even at low (5-6%) thickener concen-

trations. Depending on the thickener concentration and the nature of the soap's organic radical (from saturated or unsaturated fatty acids, plant or animal fats, synthetic fatty acids), these greases become fluid at temperatures from 100 to 200 °C and even higher. After melting and cooling, they again acquire a plastic structure, i.e. they are thermally reversible. Lithium greases are frost-resistant. A shortcoming of sodium greases is their low waterproofness.

The second group includes greases prepared with alkaline-earth metal (Ca, Ba) soaps. They are quite stable with a soap content of 8-10%. If water is the main stabilizer of these greases, when heated to 100 °C they lose their water and decompose. The calcium grease "solid oil" is an example of such greases. It is waterproof and can be used in a moist medium.

Greases prepared with aluminium, lead, and zinc soaps are used much less often. Soap greases are chiefly employed as antifriction lubricants, but they also have protective properties.

The properties of greases are improved by using soaps prepared with the simultaneous introduction of alkali and alkaline-earth metal (Na, Ca) cations. Complex soaps of high- and low-molecular fatty acids containing the same cation can also be employed. For example, a complex calcium grease (cCa) is produced by thickening mineral oils with calcium soaps of stearic and acetic acids.

3. Greases in which thermally stable organic and inorganic finely ground substances are the thickeners. These substances include urea, technical carbon, mica, silica gel, and molybdenum sulphite. These greases at present cost much more than soap and hydrocarbon ones and are used when soap greases cannot be employed, for example, in aggressive media.

The quality of greases depends on the properties and concentration of the thickener, and also on the properties of the oil being thickened, i.e. its viscosity and chemical composition. The strength of the colloidal structure of greases is improved by stabilizers such as water, alkalies, high- and low-molecular organic acids and their salts, alcohols, and esters. Additives are also incorporated to improve the properties of greases.

Service Properties. Up to recent times, the quality of greases was assessed by two indices, namely, the drop point and the magnitude of the penetration, i.e. the depth of penetration of a cone of a special instrument into the grease. The first of these indices characterizes the upper temperature limit of using the greases, and the second characterizes the thickness of the grease. But since both of these indices very approximately reflect the behaviour of greases under service conditions, they are used at present only for controlling grease production.

The behaviour of greases under operating conditions is estimated better by their structural and mechanical properties: the ultimate

shear stress or yield point—the force that must be applied to cause plastic deformation of the grease, its yielding. The ultimate shear stress depends on the temperature, and at elevated temperatures it is a better characteristic of the upper limit of proper functioning of greases than the drop point.

The temperature at which the yield strength equals zero is the true temperature of the transition of a grease from the solid state into the liquid one. When the load is removed, the colloidal structure of the grease is restored, although its strength becomes lower than the initial one. This ability to restore their plasticity reflects the thixotropic properties of greases.

The stability of the colloidal system is one of the main conditions for the normal functioning of greases in a friction unit. Colloidal and chemical stability of greases are distinguished.

When the colloidal stability diminishes owing to heating or prolonged storage, greases exhibit a tendency of syneresis—phase separation. As a result, the oil flows out, and the grease loses its plasticity and lubricating or protective property.

The action of the oxygen of the air, heating, and other factors causes oxidation and decomposition of both the thickener and the oil. In soap greases, the soap is the less stable component, and in protective ones, the oil. Acids having a corroding effect on metal and also resinous and carbonaceous deposits appear in greases. The colloidal system is partly or completely destroyed.

Production Technology. Greases can be produced by either a batch or continuous process. It is more profitable for plants producing a large range of greases in small lots to use batch processes, whereas good practice dictates the use of a continuous process for producing large lots of one grade of grease.

A *batch process* (cycle) for the production of an antifriction soap grease begins with the formation of the soap base. The cooking cauldron is loaded with 15-30% of the mineral oil and the entire portion of the fat component. The mixture is heated to 80 °C and an aqueous alkali solution or a suspension of the alkali component is added to it, the required amount being calculated beforehand. Intensive agitation at 80-100 °C cause the fats to saponify, after which the temperature is raised to 105-130 °C and the excess water is evaporated. Next the remaining amount of the oil is added to the soap base and the mixture is heated while thoroughly agitating it. Calcium soaps should be heated to 100 °C, and sodium ones to 200 °C. After the completion of cooking, the grease is cooled.

The main apparatus for the preparation of grease is a cooking cauldron provided with a steam jacket and an agitator or mixer. Various types of mixers are used such as gate, propeller, anchor (horseshoe), and planetary ones. A heat-carrying agent, for example, steam, hot oil, or a diphenyl mixture is fed into the cauldron jacket

for heating. Upon completion of cooking, water is fed into the jacket. The cooling stage does not have to be carried on in the cauldron; special cooling drums and coolers of the "tube in tube" type provided with scrapers are used for cooling.

The colloidal stability and service life of greases are improved if after cooling they are homogenized and deaerated. Homogenization (the creation of a uniform structure) consists in forcing the grease through a narrow annular opening under a pressure of 20-25 MPa. Deaeration is conducted with the forcing of tne grease through slots into the space of an apparatus from which the air is continuously evacuated.

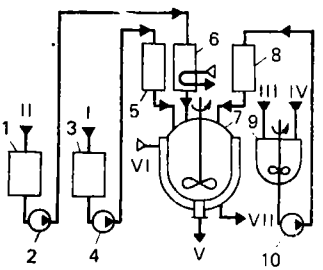

Fig. 103. Flow diagram of batch grease production process:
1, 3—tanks; *2, 4, 10*—pumps; *5, 6, 8*—gauges; *7*—reactor; *9*—agitator for milk of lime; *I*—oil; *II*—fat component; *III*—water; *IV*—suspension of alkali component (milk of lime); *V*—product grease; *VI*—steam; *VII*—condensate

For properly conducting the production process, instruments for controlling and regulating the temperature and pressure are installed, as well as devices for dosing the components. A flow diagram of the process is given in Fig. 103.

A *continuous process* of producing greases on prepared soaps consists in the following. Prepared dry lithium stearate is ground into a powder, and then a suspension of the soap powder in half of the total amount of synthetic oil is prepared. The suspension is heated up to tne formation of a uniform melt (from 30 to 205 °C) while passing through a tube in tube heater outfitted with a shaft carrying scrapers. At the outlet from the heat exchanger, the suspension is mixed with the remaining oil heated in an exchanger up to 80 °C. The grease, which after mixing has a temperature of 145 °C, is cooled by water to 60 °C in a tube in tube type cooler with an internal shaft and scrapers. The components are dosed by special pumps.

The technology of producing hydrocarbon greases is much simpler than for soap greases, and mainly consists in melting the components together while mixing them, evaporation of the water, and cooling of the finished melt. Such widespread protective greases as technical vaseline and gun grease are prepared on highly viscous oils. This process can readily be made continuous because the composition and the technology of producing hydrocarbon greases are not involved.

Thickened Lubricating Oils. Motor oils employed for internal-combustion engines are divided into winter and summer ones. Winter oils must have a lower viscosity and pour point than summer ones.

Moreover (see Sec. 3.1), oils for carburettor and diesel engines are distinguished.

One of the most important trends in improving the quality of oils is the creation of all-season, all-purpose, and prolonged-service oils.

The all-season and all-purpose oils enable an engine to operate in summer and winter (i.e. in hot or cold weather) without changing the oil, have a smaller assortment of oils at service stations and garages, and simplify the storage of the lubricating oils and the servicing of the engines. These properties are inherent in oils having a high viscosity index, a low pour point, and that are chemically and thermally stable.

A promising way of producing all-season oils is the production of oils thickened with polymer viscous additives in an amount of from about 1 to 10%, and sometimes more. These solutions are intermediate products between oils and greases. The viscosity of thickened oils, like that of greases, depends not only on the hydrocarbon composition of the oil and the temperature, but also on the speed of the moving surfaces being lubricated, i.e. on what is called the shear speed.

When a polymer dissolves in an oil, its macromolecules can combine into associates and form a three-dimensional structure, which increases the viscosity of the oil. When the shear grows, the polymer molecule associates decompose, their three-dimensional structures break up, and the macromolecular chains become oriented in the direction of the acting force. The viscosity of the solution drops. When the speed lowers, the polymer structure is restored.

Mineral and synthetic oils, as well as mixtures thereof, are used as the liquid bases for the production of thickened oils. Mineral oils in this case must have a low viscosity (of the order of magnitude of 3-8 mm^2/s at 100 °C), a low volatility, a high viscosity index (85-95), a low pour point, and should not form varnishes and carbon deposits.

Synthetic lubricating oils are chemically produced products such as esters, polyalkylenes, polyglycols, and silicone liquids.

The most popular are esters of dibasic acids (adipic, azelaic, sebacic) and high-molecular monatomic alcohols, as well as esters of polyatomic alcohols (pentaerythritol, trimethylolethane, etc.) and monobasic organic acids of the C_7-C_9 fraction. Ester oils have a number of very valuable properties, namely, a high (over 130) viscosity index, a low pour point, and a low volatility.

The production of synthetic oils is restricted by their considerably higher (two or three times) cost in comparison with mineral oils, but their longer service life, smaller consumption, and improved engine operation make their use economically expedient.

A number of liquid polymers including polyisobutylene, low-molecular butylenes, alkylated styrene, and polyalkylmethacrylates are employed as oil thickeners. When thickening oils, account must

also be taken of the need to combine the viscous thickening additives with dispersing, pour-point, and antiacid additives.

An increase in the service life of thickened oils in comparison with ordinary ones saves a considerable amount of fuel and lubricants. The saving is achieved owing to the reduction of the unit volume of the lubricating system, the increase in the service life of oil before changing, and lowering of the burned out amount. For example, thickened oil of Grade M6з/10B operates without being changed in a carburettor moderately hopped-up engine (ZIL-130) during a vehicle run of 18 000 km, whereas unthickened oil of Grade M8B, which can be used instead of the former oil, operates only during 6000-9000 km.

11.3. Petroleum Asphalts

The consumption of asphalts in all the countries of the world is constantly growing. In the large variety of petroleum products, asphalts occupy an important place both in their volume and in the assortment of the products. A total of 70 grades of asphalts are produced. 90% of all the asphalts marketed in the USSR are produced at petroleum refineries, but their production at consuming enterprises is simultaneously growing quite appreciably. Such enterprises include asphalt-concrete, roofing felt, and other ones producing building materials.

Asphalts are dark plastic petroleum products, liquid, semi-solid, and solid, depending on the grade and designation. Asphalts have the highest viscosity of all petroleum refining products.

From the physicochemical viewpoint, asphalts are a complicated colloidal system of asphaltenes and associated high-molecular resins in a medium of oils and low-molecular resins. The asphaltenes, depending on their quantitative ratio to the resins and oils, can form either a rigid framework or individual micelles adsorbing and retaining the resins. The oils are the medium in which the resins dissolve and the asphaltenes swell.

Asphalts, especially paving ones, must meet quite diverse requirements. The main purpose of paving asphalts is the binding and gluing together of mineral materials (crushed stone, sand), the imparting of hydrophobic properties to them, and the filling of the spaces between their particles. This is why the strength and service life of asphalt pavements depend on the quality of the asphalts.

Paving asphalts must: (a) retain their strength at elevated temperatures, i.e. be heat-resistant; (b) retain their elasticity at below-zero temperatures, i.e. be frost-resistant; (c) resist compression, impacts, and fracture under the action of moving vehicles; (d) ensure good adhesion to the dry or moist surface of the mineral materials; and (e) retain their initial viscosity and strength for a long time.

Building (roofing) asphalts may be less elastic, but they should be harder.

Under service conditions, asphalts deteriorate owing to the effect of sunlight, the oxygen of the air, high and low temperatures, sharp temperature changes, and increased dynamic loads. The colloidal structure of the asphalt becomes destroyed, the resins and asphaltenes transform into carbenes and carboides, the asphalt loses its ability to create an integral covering layer, and it becomes brittle, cracks, and crumbles. It also loses its ability to adhere to mineral materials such as crushed stone, stone, or sand. All this results in the destruction of roads, roofing felt, foundations, pipeline insulation, etc.

Rapid-, medium-, and slow-curing asphalts of Grades БГ, СГ, and МГ, and also viscous asphalts of Grades БНД and БН are used in road construction, while Grade БН asphalts are used for building purposes.

The service properties of prepared asphalts are controlled by a number of indices, namely, the depth of penetration of a needle, the softening point, the stretching, brittle point, cohesion, and adhesion.

The depth of penetration of a needle and the softening point characterize the hardness of an asphalt, the stretching—its elasticity. The cohesion, i.e. the strength of thin layers of asphalt in a tension test, indicates the strength of the asphalt, while the brittle point characterizes its frost resistance. The adhesion—the ability of forming a strong bond with mineral materials—is determined only qualitatively.

The basic specifications for viscous paving and building asphalts are given in Table 19.

The proportion of the components in an asphalt affects its properties. An increase in the asphaltene content makes an asphalt harder, resins improve the elasticity of an asphalt and its cementing properties, while oils make asphalts frost-resistant.

The dependence of the service properties of asphalts on their chemical composition is characterized by the asphaltene-to-resin ratio A/R and the ratio of the sum of asphaltenes and resins to the oil content (A + R)/O. Asphalts combining good heat and frost resistance with a high strength contain about 23% of resins, 15-18% of asphaltenes, and 52-54% of oils, i.e. A/R = 0.5-0.6, and (A+R)/O = 0.8-0.9.

The adhesive properties of asphalts are improved by incorporating surfactant additives into them. The stillage residues of synthetic fatty acid distillation are generally employed as the surfactants (1-4%).

Methods of Asphalt Production. Asphalts can be produced in one of three ways: (1) by the deep vacuum distillation of fuel oil; (2) by the oxidation of residual petroleum products by air at a high temperature; and (3) by compounding residual and oxidized products.

Table 19. **Characteristic of Asphalts**

Indices	Paving asphalts					Building asphalts	
	БНД-40/60	БНД-60/90	БНД-90/130	БНД-130/200	БНД-200/300	БН-70/30	БН-90/10
Depth of needle penetration, 0.1 mm*:							
at 25 °C	40-60	61-90	91-130	131-200	201-300	21-40	5-20
at 0 °C, not under	13	20	28	35	45	—	—
Softening point over ring and sphere, °C, not under	51	47	43	39	35	70	90
Stretching, cm, at least:							
at 25 °C	40	50	60	65	—	3	1
at 0 °C	—	3.5	4.2	6	20	—	—
Brittle point, °C, not over	−10	−15	−17	−18	−20	—	—
Flash point, °C, not under	220	220	220	220	200	230	240
Cohesion to marble or sand	Positive						

* The depth of penetration of a needle is determined in a special instrument in which the needle is connected to a pointer indicating the result on a round dial. To convert the measurement result to millimetres, it is multiplied by 0.1.

The quality of produced asphalts depends first of all on the quality of the feed stock, and for oxidized asphalts also on the temperature, the duration of oxidation, and the consumption of air.

The residual products of refining heavy resinous and asphaltenic petroleums such as residual stock (tar), cracking residues, and lubricating oil treatment extracts are the best feed stock for producing asphalt. The quality of asphalts is higher and the technology of their production is simpler when the petroleum contains more resinous and asphaltenic components, the asphaltene-to-resin ratio is higher, and the content of solid paraffins is lower.

Asphalt is produced by deep vacuum distillation from residual stock having optimal A/R and (A + R)/O ratios. High-paraffinic petroleums are the worst feed stock for producing asphalt. A high paraffin content in petroleums adversely affects the most important service indices of asphalts, i.e. their strength and adhesion to mineral pavements. The petroleums used to produce asphalts must be well desalted.

The tar produced from Soviet petroleums and the most suitable for producing oxidized asphalts is characterized in Table 20.

Table 20. **Characteristic of Tar from Resinous Petroleums**

Petroleum	Content of tar, %	Density, d_4^{20}	Softening point, °C	Group composition, %			$\frac{A}{R}$	$\frac{A+R}{O}$
				asphaltenes	resins	oils		
Yareg	56	0.989	28	4.2	33.6	62.2	0.15	0.62
Arlan	55	0.999	30	7.0	30.6	62.4	0.23	0.60
Sernovodsk	—	—	28.5	5.8	30.4	63.8	0.19	0.56
Chernushinsk	—	0.984	30	5.6	28.7	65.7	0.20	0.52

In the oxidation of residual stock (tar), part of the oils transform into resins, and part of the resins transform into asphaltenes. Hence, the amount of resins remains practically unchanged, while the A/R and (A + R)/O ratios approach their optimal values.

Technology of Asphalt Oxidation. Oxidated asphalts are produced by the simultaneous action on petroleum residues of the oxygen of

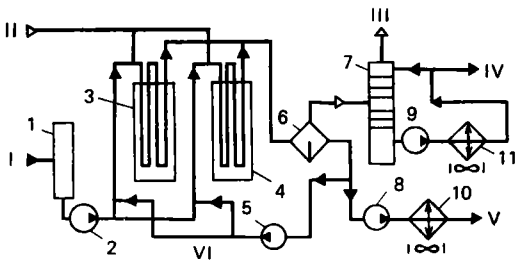

Fig. 104. Flow diagram of plant for producing asphalt in tubular reactors: *1*—tank; *2*, *5*, *8*, *9*—pumps; *3*, *4*—reactors; *6*—evaporator; *7*—scrubber; *10*, *11*—coolers; *I*—residual stock; *II*—air; *III*—oxidation gases; *IV*—overhead distillate; *V*—asphalt; *VI*—recirculated product

the air and a high temperature. Elevation of the temperature speeds up the process. But at a too high temperature the reactions of formation of carbenes and carboides accelerate, which cannot be tolerated.

Oxidated asphalts are produced by both batch and continuous processes. The latter may involve a compressor or do without one. The batch process has a low productivity and yields asphalt of a low quality.

The method without a compressor is carried out in a horizontal apparatus with several reaction and one settling sections. Air is fed into the feed stock by revolving dispersers. A highly dispersed system forms, good contact of the air with the liquid medium is ensured, and the oxidation process is speeded up. This method is employed for the production of asphalt directly at its place of use.

The continuous production of oxidated asphalt with the supply of air by a compressor is conducted either in oxidizers of the column type or in tubular reactors. Plants employing this equipment differ somewhat in their flow diagram and operating conditions. The oxidation of asphalts is attended by the evolution of heat.

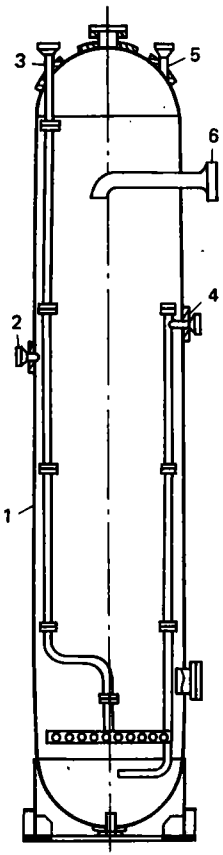

Fig. 105. Column type oxidizer:
1—housing; *2*—connection for feeding in asphalt; *3*—connection with distributor for introducing air; *4*—connection for withdrawing product; *5*—connection for discharging oxidation gases; *6*—connection for feeding in water

Oxidation in a Tubular Reactor. A combined plant consists of two sections—for the vacuum distillation of fuel oil, and an asphalt section. In the vacuum distillation section, the fractions with an end boiling point of 350 °C and with a boiling range of 360-485 °C are distilled from the fuel oil, while the tar with a temperature of 250 °C is delivered to the asphalt section having a capacity of 500 000 tonnes a year. A flow diagram of this section is shown in Fig. 104. The diagram provides for the simultaneous production of two grades of asphalt (two parallel flow lines) by the oxidation of the tar in two tubular reactors. From feed stock tank *1*, the tar is delivered by pump *2* into reactors *3* and *4*. Before the reactors, tne stock is mixed with air and a recirculate supplied from separator *6* by pump *5*. The oxidation product from reactors *3* and *4* flows into separator *6*. The balance amount of the asphalt is fed by pump *8* through cooler *10* into a tank for storage and shipping. The oxidation gases and the overhead distillate in the vapours from the evaporators are delivered into scrubber *7*, where the overhead distillate condenses ("black solar oil"). The oxidation gases emerging from the top of scrubber *7* are decontaminated in the furnace for completing combustion. The plant includes sections for storing, packing, and shipping asphalts. Paving asphalts are automatically loaded into railway tank cars and

asphalt trucks, while the building asphalts are packed into kraft bags with a mass of 200-250 kg and are loaded by a gantry crane.

Technological Conditions. The technological conditions in the reactor are as follows:

Grade of asphalt produced	БНД-90/130	БН-90/10
Temperature of reaction, °C	270	270
Pressure, MPa:		
at inlet	0.7	0.7
at outlet	0.3	0.3
Unit rate of air flow, m^3/m^3	120	170
Heat of reaction, kJ/kg	712	837

Material Balance. The material balance of the plant (in %) is:

Feed	
Fraction up to 350 °C (fuel oil of Samotlor petroleum)	100.0
Products	
Fraction up to 350 °C	8.5
Fraction 360-485 °C	47.5
Paving asphalt БД-90/130	24.7
Building asphalt БН-90/10	16.5
Overhead distillate ("black solar oil")	0.4
Oxidation gases and losses	2.4
Total	100.0

Characteristic of Reactor. The reactor is characterized by the following data, given for one section:

Diameter of reactor tubes, mm	219 × 7
Length of reactor tube, m	12
Number of tubes	24
Total length of coil, m	320
Surface area of tubes with fins, m^2	880

Air is fed into the reactor from below that flows around the external side of the coil to remove the reaction heat. The air is discharged into the atmosphere. When the temperature of the air at the inlet is 26 °C, it is 112-142 °C at the outlet.

Technical and Economical Indices. The approximate technical and economical indices of the plant per tonne of asphalt are as follows:

Steam at pressure of 1.0 MPa, kg	115
Chemically purified water, kg	141
Circulation water, m^3	5.43
Electrical energy, MJ	43.2

The plant produces steam at a pressure of 1.2 MPa in an amount of 110 kg per tonne of asphalt.

Oxidation in Column Apparatus. An oxidizing column is 3-3.4 m in diameter and about 23 m tall. It is a hollow apparatus with a simple internal design (Fig. 105). The level of the asphalt is 14-

15 m, and the height of the vapour phase is at least 5 m. The maximum load relative to air is 5.5 m^3/m^2 a minute.

Technological Conditions. The technological conditions are as follows:

Temperature in column, °C:	
at top	200-240
at middle	250-280
at bottom	250-290
Air pressure, MPa	0.08-0.12
Specific rate of air flow, m^3/tonne in production of Grade БНД-40/60 asphalt	50-60
Content of oxygen in oxidation gases, % by volume	2.1-2.9

The heat evolved as a result of the reaction is utilized in a column type apparatus for heating the feed stock from 130-140 °C to the reaction temperature. If there is insufficient heat, part of the stock is heated in a furnace, while if there is excess heat it is removed by feeding water or steam into the top part of the column type apparatus.

Safety Precautions. Asphalts and tars heated to a high temperature may self-ignite in the presence of the oxygen of the air.

A sharp change in the rate of flow of the air, feed stock, or recirculate may cause ignition inside an apparatus; a sharp change in the temperature at the furnace outlet may cause coking of the reactor, a sudden increase in the pressure, and bursting of the apparatus. This is why emergency blocking must be employed at a plant in addition to the conventional measures for sealing the equipment and thorough control of the technological conditions. When the supply of recirculate stops, the supply of air to the mixer is switched off automatically.

11.4. Additives

Additives are complicated chemical substances whose molecules include alkylphenols, sulphur, phosphorus, oxygen, nitrogen, and metals (calcium, barium, magnesium, zinc). The heteroatoms are very often contained in an additive molecule in the form of complicated groupings such as a xanthate (I) or dithiophosphate (II) one:

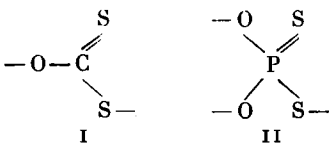

I II

Additives are produced by multiple-stage organic synthesis. Intermediate stages such as alkylation, phosphorization, sulphuration, sulphurization, carboxylation, chlorination, condensation, and polymerization are needed most frequently in the process of synthesis.

Auxiliary processes are also required, namely, separation of intermediates from unreacted substances, neutralization, drying, removal of solvents and catalysts.

The initial substances used to produce additives include alkylphenols, sulphoacids, alkenes, chlorinated alkanes, naphthalene, sulphur trioxide, phosphorus pentasulphide, carbon dioxide, barium and calcium hydroxides, organic acids, alcohols, and many other substances. The solvents used include gasoline, benzene, toluene, various alcohols, kerosene, and water. For example, the synthesis of an ashless detergent succinimide additive is performed in two stages.

In the first stage, an alkenylsuccinic anhydride is obtained by combining a polyolefin having an end double bond with maleic anhydride:

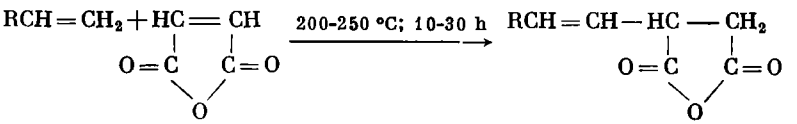

where R is a polyalkenyl (M = 300-3000), for example, a residue of polyethylene, polypropylene, polyisobutylene, or a copolymer of isobutylene and styrene.

In the second stage, the alkenylsuccinic anhydride reacts with amines to form an imide of an alkenylsuccinic acid—an alkenylsuccinimide:

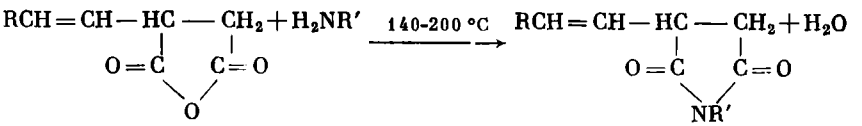

The process of producing a phosphorus antiscuff additive of Grade ДТ-11 consists of eight stages.

1. The obtaining of diisobutyldithiophosphoric acid by the phosphorization of isobutyl alcohol with phosphorus pentasulphide and dilution of the reaction products with a mineral oil:

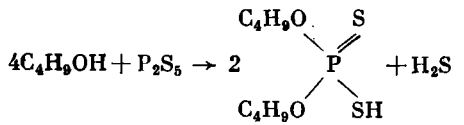

2. Production of diisooctyldithiophosphoric acid by the phosphorization of isooctyl alcohol with phosphorus pentasulphide and dilution of the reaction products with a mineral oil:

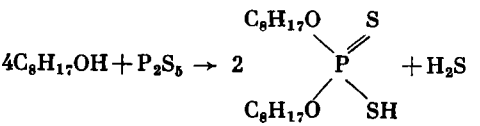

3. Separation of mechanical admixtures, unreacted phosphorus pentasulphide and resins from the solution of the phosphorization reaction products by filtration or settling.

4. Neutralization of the mixture of dialkyldithiophosphoric acids with zinc oxide:

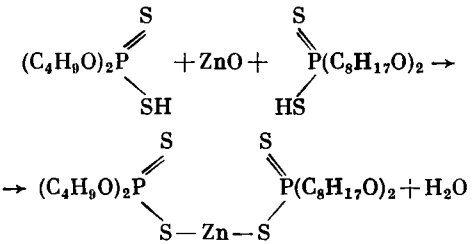

5. Dilution of the neutralization products with a solvent and separation of the coarse admixtures by centrifuging.

6. Repeated centrifuging or filtration.

7. Distillation of the solvent and addition of a mineral oil.

8. Packing of the products.

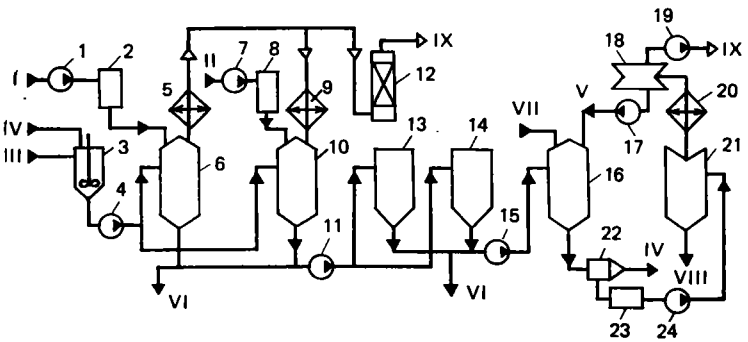

Fig. 106. Flow diagram of a plant for producing a Grade ДФ-11 additive: *1, 4, 7, 11, 15, 17, 24*—pumps; *2, 8*—batchers; *3*—mixer; *5, 9, 20*—coolers; *6, 10, 16*—reactors; *12*—scrubber; *13, 14*—settling tanks; *18*—vacuum receiver; *19*—vacuum pump; *21*—evaporating apparatus; *22*—centrifuge; *23*—tank; *I*—isobutyl alcohol; *II*—isooctyl alcohol; *III*—mineral oil; *IV*—phosphorus pentasulphide; *V*—butanol; *VI*—residues; *VII*—zinc oxide; *VIII*—prepared additive; *IX*—uncondensed gases

Flow Diagram. Figure 106 presents a flow diagram of a batch process for the production of Grade ДФ-11 additive.

Isobutyl alcohol is delivered by pump *1* from the tank of the refinery's feed stock store through batcher *2* into reactor *6*. Simultaneously, a suspension of phosphorus pentasulphide in mineral oil is prepared in mixer *3*. Isooctyl alcohol is fed into reactor *10* from tank *8*. The alcohols are heated in the reactors to 60 °C, the phosphorus pentasulphide suspension is heated to 80 °C, is fed into reactors

6 and *10*, and is mixed for 40-60 minutes. During the following 20 minutes, the temperature is raised to 90-95 °C, held at this value for 30 minutes, and then the mixture is cooled to 35 °C.

After taking a sample, the reaction products are diluted with a mineral oil. From reactor *6* (*10*), the products flow into settling tank *13* (*14*), where they spend two hours. Next the bottom layer is drained off, while the top one is fed by pump *15* into neutralizing reactor *16* into which a solvent (butanol) and zinc oxide are also introduced. The temperature of neutralization is 20-25 °C and its duration is 10-12 hours. After neutralization, the product is allowed to settle for 24 hours.

Mechanical admixtures are separated from the settled product—the prepared additive in a butanol solution—in centrifuge *22*. The solvent is separated under a moderate vacuum of 26.6 kPa at 85 °C in apparatus *21*. The butanol vapour condenses in cooler *20* and is gathered in vacuum receiver *18*, whence pump *17* returns it to neutralizing reactor *16*. The prepared additive is diluted with Grade АУ spindle oil and is packed into iron kegs. All the production residues are diluted with fuel oil and are burned in a special furnace.

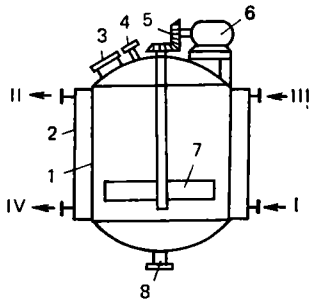

Fig. 107. Reactor with a mixing device:

1—housing; *2*—jacket; *3*—hatch; *4*—connection for feeding in stock; *5*—reducing gear; *6*—electric motor; *7*—paddle mixer; *8*—connection for discharging products; *I*—cold water; *II*—warm water; *III*—steam; *IV*—condensate

Material Balance. The material balance of Grade ДФ-11 additive production (in %) is given below

Feed		*Products*	
Isobutyl alcohol	4.54	Additive ДФ-11	33.70
Isooctyl alcohol	7.94	Distilled solvent	57.31
Phosphorus pentasulphide	7.14	Hydrogen sulphide	1.01
Spindle oil АУ	16.82	Losses of solvent	3.37
Zinc oxide	2.83	Residues of settling and centrifuging	3.57
Solvent	60.73	Miscellaneous losses	1.04
Total	100.00	Total	100.00

Equipment. The main apparatus for conducting phosphorization, neutralization, and distillation of the solvent is a reactor with a mixing device (Fig. 107) provided with a jacket into which either steam or water is fed as required. The temperature in the reactor is

easily monitored by increasing or decreasing the rate of flow of the heat-carrying agent and coolant. The reactor housing, shaft and paddles of the mixer are made from alloy steel. The mixer is driven by a motor mounted on the lid of the reactor.

Safety Precautions. Toxic and explosive substances such as phosphorus pentasulphide, isobutyl and butyl alcohols are employed in the production of the phosphorus additive. The reaction yields a toxic gas—hydrogen sulphide. Therefore, the following precautions are taken at a plant to ensure normal working conditions:

(1) the pumps, flanges, pipelines, and apparatus are reliably sealed;

(2) an inert gas is supplied to the equipment for scavenging it;

(3) the hydrogen sulphide is trapped in an alkaline scrubber;

(4) a sound signalling device is installed to warn of the presence of hydrogen sulphide in the air of premises;

(5) the entire premises are outfitted with common ventilation.

11.5. Petroleum Acids and Sulphoacids

Petroleum (naphthenic) acids are contained in the kerosene, diesel, and lubricating oil fractions. When the boiling range of the petroleum fractions is higher, the petroleum acids associated with them have a larger molecular mass. The petroleum acids generally contain one carboxyl group in their molecule, therefore the acid number diminishes with an increase in the molecular mass.

The acid number of the petroleum acids in tne kerosene fractions is 270-280 mg of KOH per gramme, and in the diesel fractions is 220-230 mg of KOH per gramme.

When petroleum acids react with alkalies, they form salts called **soaps**. The latter dissolve in an aqueous alkali solution better than in the petroleum fraction, and therefore they concentrate in the alkaline residues in the alkaline treatment of petroleum products. A part of the hydrocarbons of the fraction being treated passes into the alkali solution together with the soaps. They are called non-saponifying substances. The amount of entrained hydrocarbons grows with an increase in the boiling range of the fractions being treated. In the treatment of kerosene fractions, the non-saponifying substances form 5-6% of the organic part of the alkaline residues, in the treatment of diesel fractions this amount increases to 18%, and for lubricating oil fractions even to 40-60%.

The alkaline residues are a source for the production of naphthenate salve (naphtha soap). Acidol-napthenate compounds, Acidol, Emulsol (self-emulsifying oil), and distilled petroleum acids.

Naphthenate salve is a greasy substance whose colour ranges from straw yellow to dark brown. It contains sodium soaps of petroleum acids (sodium naphthenates), non-saponifying substances, min-

eral salts, and approximately 50% or more of water. Naphthenate salve is separated from an alkaline solution by salting out with sodium chloride.

Acidol-naphthenate compounds are a mixture of naphthenate salve and free petroleum acids (Acidol). They contain about 30% of water and about 70% of acids, soaps, and non-saponifying substances. When the alkaline residues are treated with an insufficient amount of weak sulphuric acid, part of the soaps decompose with the evolution of free petroleum acids. Owing to the high solubility of soaps in acids, it is sufficient to separate only a part of the petroleum acids for the entire residue of the petroleum soaps to pass over from the alkaline solution into the formed acid layer.

Acidol is an oily liquid consisting of free petroleum (naphthenic) acids with lubricating oil hydrocarbons (non-saponifying) dissolved in them and 5% of water. Acidol is obtained when treating the alkaline residues with weak sulphuric acid in an amount adequate for decomposing all the sodium soaps of the petroleum acids contained in the solution.

Distilled petroleum acids with a content of non-saponifying components from 1.5 to 5% are obtained in the deoiling of Acidol by vacuum distillation. To produce light petroleum acids employed in the paint and varnish industry for preparing siccatives and coloured varnishes, two-fold vacuum distillation is used.

Sulphoacids are a product of treating pteroleum distillates with sulphuric acid. A sulphoacid molecule contains the sulphogroup SO_2OH and a hydrocarbon radical, most often an aromatic one.

The sulphoacids have diverse uses in the national economy. A technical mixture of petroleum sulphoacids is known as **Petrov's contact**. It is employed for decomposing fats, in treating nides, as a detergent in the textile industry, and in the production of plastics and additives to lubricating oils.

Kerosene and gas oil fractions containing from 20 to 40% of arenes are the stock for producing Petrov's contact because arenes lend themselves the easiest to sulphurization with the formation of sulphoacids. As usual, in the sulphurization of petroleum products, two layers form: an upper one—acid oil, and a lower one—acid tar. The high-molecular aromatic sulphoacids, which are exactly the target product of the process, dissolve well in acid oil, and then, after separation of the acid oil and acid tar, are extracted from the former with fresh water.

Gaseous suphur trioxide is generally used as the sulphurizing agent for arenes.

Commercial Petrov's contact contains about 50% of sulphoacids, the remainder being non-saponifying substances.

A flow diagram of a continuous process for the sulphurization of a kerosene and gas oil fraction is given in Fig. 108.

The main equipment in the production of sulphoacids includes mixers (sulphurators) and settling tanks with conical end plates. Non-metallic protective coatings such as diabase tiles and asbestos-based plastics are used to prevent corrosion of the equipment.

Utilization of Acid Tars. Acid tars form as producion residues in the sulphuric acid treatment of fuel distillates, distillate and residue lubricating oils, and also when producing sulphoacids. They consist of reaction products, free sulphuric acid, and a certain amount of non-saponifying components.

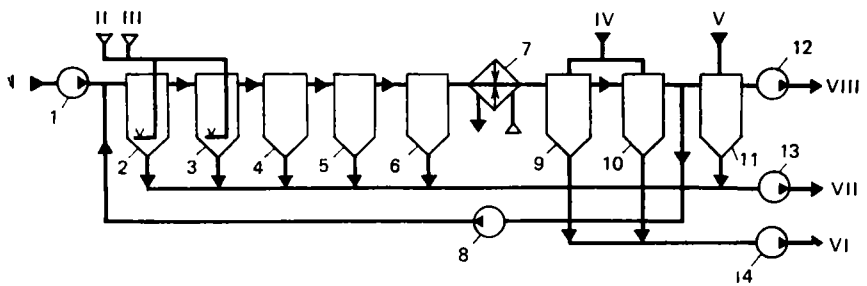

Fig. 108. Flow diagram of sulphoacid production:
1, 8, 12-14—pumps; *2, 3*—sulphurators; *4-6, 9, 10*—settling tanks; *7*—steam heater; *11*—neutralizer; *I*—feed stock; *II*—sulphur trioxide; *III*—air; *IV*—water; *V*—caustic soda solution; *VI*—contact solution; *VII*—acid residual stock; *VIII*—neutral oil

Acid tars can be utilized in various ways. That produced in the sulphurization of kerosene is used for the production of a rough detergent in the form of a paste for washing equipment, floors, etc.

When acid tar is treated with water, two layers form: a lower one consisting of 30-75% sulphuric acid, and an upper one containing an organic resinous part. Weak sulphuric acid is used in the production of mineral fertilizers and building materials, true in a quite limited amount. The residual resin is mixed with fuel oil and burned in a furnace.

When a petroleum refinery incorporates a sulphuric-acid plant, it is good to employ the method of thermal cracking of the acid tar. Acid tar containing 71-85% of the acid is fed into the furnace for burning hydrogen sulphide in the sulphuric-acid plant. The organic admixtures burn almost completely and do not affect the quality of the acid.

Chapter 12

GENERAL FACILITIES, AT A REFINERY

12.1. Reception and Transportation of Petroleum and Its Products

Handling. Petroleum is delivered to a refinery by pipelines, railway (in tank cars), or by water (in tankers and tank barges). Pipelines are the most economical way of delivering petroleum and its products.

The way of delivery determines the reception of the stock at the refinery. Petroleum delivered by pipeline is fed directly into the tanks of the stock farm. When delivered by water, it is pumped out of the tankers by pumps installed on them.

Special discharging facilities called racks are erected at refineries for unloading petroleum from railway tank cars. There are single- and double-service railway racks adapted for receiving petroleum by overhead or bottom unloading. In the latter case, the petroleum flows from the tank cars by gravity into underground reservoirs, whence pumps deliver it into the stock tank farm of the refinery. If overhead discharging is used, a flexible hose is introduced into a tank car with petroleum through its top hatch. The hose is connected to a stand pipe of the rack. The petroleum flows through the stand pipes into the inlet of a pump that delivers it into the stock tanks.

The refined products are shipped to consumers by pipelines, railway, water, or motor vehicle transport. Pipelines are the most economical for long-distance transportation. Trunk pipelines connecting petroleum refineries with major product consumers handle gasoline, kerosene, diesel fuel, and sometimes fuel oil.

Petroleum products are loaded into tank cars on racks. In racks of the stand pipe type, the headers supplying the petroleum products are under the rack. The header is connected to a stand pipe, while the latter terminates in a flexible hose that is lowered into the neck of a car. The product to be loaded is picked up by a pump from the relevant product tank and is pumped via the header, stand pipe, and hose into the car.

Another type of rack is the gallery one, in which loading is monitored and controlled from above. Gallery racks are designed with bottom and overhead delivery of the product. In the first case, the header is laid on the ground and the product is loaded through stand pipes, and in the second, the headers are higher than the top of the tank cars and the product is delivered into a car via a side branch pipe of the header.

Figure 109 shows a combination double-service rack of the gallery type intended for the bottom discharging of petroleum and the loading of fuel oil through the top hatches of tank cars.

More progressive facilities exist for loading petroleum products into tank cars, namely, automated product loading stations. A loading station consists of several loading posts. Each post includes a loading facility and a switching device by means of which the cars are spotted in turn for loading. The capacity of a loading station depends on the number of loading posts.

To prevent the discharge of harmful substances into the atmos phere, devices for airtight loading have been developed. They introduce the loading pipe into the neck of a car, automatically sea-

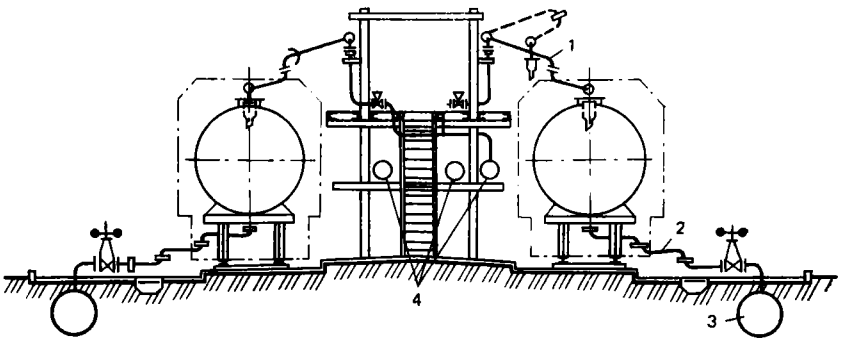

Fig. 109. Combination double-service rack for discharging petroleum and loading fuel oil:

1—loading stand pipe; *2*—contrivance for bottom discharge of petroleum; *3*—petroleum header; *4*—headers for loading various fuel oil grades

the car hatch, stop loading upon receiving a signal from a special transmitter, unseal the car, and lift the loading pipe to its initial position.

Several racks are erected at a refinery. Each of them is intended for shipping a definite group of petroleum products, namely, light, black products, lubricating and similar oils, and liquefied gases. Each rack is provided with several headers, which makes it possible to simultaneously load several different products of the same group, for example gasoline and diesel fuel. At a number of refineries, the discharging of petroleum and the loading of black products are combined.

12.2. Storage of Petroleum and Its Products. Preparation of Commercial Products

Tank Farms. Petroleum and its products are stored at refineries in reservoirs or tanks that are combined into groups. A group of tanks serving a single purpose is called a **tank farm**. Farms are divided into stock, intermediate, and commercial product ones.

The **stock farm** is intended for storing petroleum. Its capacity depends on the conditions of stock delivery. If petroleum is delivered to a refinery by pipeline or railway, the supply of stock in the stock farm should ensure continuous operation of the refinery during seven days. If the petroleum is delivered by water, the storage period is increased to ten days. Stock farms are provided with high-capacity tanks, each for 20 to 50 thousand cubic metres.

Intermediate farms are intended for storing the stock for the relevant technological plants and are located in direct proximity to them. The stock from the intermediate farms is generally taken in by the pumps of the plants. The piping of the intermediate farms makes it possible to deliver low-grade products from the plants to them and recycle these products to the plants.

Many technological plants have been transferred to operation according to a "direct communication" diagram. Here the product of one plant, which is the feed stock of another one, is delivered directly for processing without passing through intermediate farms.

The finished products are stored in **commercial product farms** located outside the zone of the technological plants. The capacity of the product farm depends on the storage periods established by the standards used for technological designing. The product farms should ensure the possibility of receiving and storing liquid petroleum products produced during 15 days and liquefied gases produced during three days. If the products are shipped by pipelines, this storage period is reduced to seven days. Special storage periods are established for products shipped in containers or in bulk (additives, asphalt, coke, etc.).

Tanks. Steel and reinforced-concrete reservoirs and tanks are used at refineries for storing petroleum and its products. With respect to their location and layout, underground and surface tanks are distinguished.

Vertical cylindrical fixed-roof tanks (Fig. 110) with a capacity from 100 to 20 000 m^3 are the most popular at refineries. The tank roof accommodates a hand-gauge hatch, skylight, safety and breather valves. The latter two valves are not installed when storing black products. The bottom part of the tank on the bottom belt accommodates a syphon (drain) cock, a manhole, and reception and dispensing connections used to deliver products into or out of the tank. If

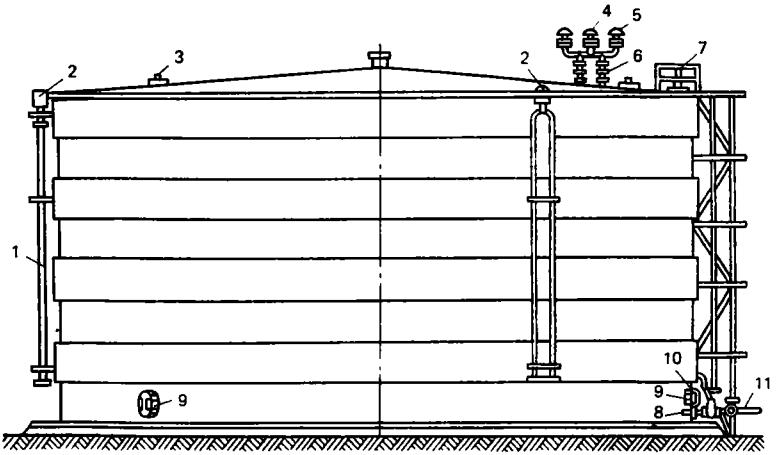

Fig. 110. Vertical steel cylindrical tank for storing light petroleum products: *1*—foam lines; *2*—foam chamber; *3*—skylight; *4*—breather valve; *5*—safety valve; *6*—flame arrester; *7*—hand-gauge hatch; *8*—syphon cock; *9*—manhole; *10*—tank clap valve; *11*—reception and dispensing connection

a tank is intended for storing easily congealing products (lubrication and fuel oils, etc.), it is outfitted with a special heating arrangement.

Cylindrical tanks are convenient to erect. The steel tank walls are welded beforehand into sheets that are rolled up into coils and delivered to the construction site. Here the coils are unrolled by special contrivances, and the sheets are welded to the prepared bottom.

When gasoline fractions or petroleum are stored in conventional vertical tanks with fixed roofs, a large amount of the light fractions is lost because of **breathing** of the tanks. When the tank is being filled, a definite volume of air saturated with gaseous hydrocarbons is displaced from it into the atmosphere. This volume equals that of the gasoline or petroleum pumped into the tank. Losses of this kind are called "major breathing". Losses due to the change in the storage conditions during a day are called "minor breathing". In the daytime, the sun heats the gas space of a tank, and the pressure in it grows. When the pressure exceeds the load on the breather valve, the latter opens, and the excess gas is discharged into the atmosphere to level out the pressure. At night, when the temperature lowers, a vacuum is produced in the tank, the breather valve opens again, and atmospheric air flows into the tank.

Evaporation losses are reduced by employing tanks of a special design with a pontoon and a floating roof. In these tanks, the evaporating surface of the liquid is separated from the ambient medium by

special floating membranes (pontoons). These tanks are used for storing gasoline, kerosene, and petroleum.

A floating roof is a hollow disk made from steel sheets two to five millimetres thick resting on the surface of the liquid. There is practically no gas space in floating roof (breathing) tanks (Fig. 111), and therefore losses incurred by major and minor breathings are excluded. To prevent sinking of a floating roof, its disk is divided by radial partitions into a number of airtight compartments. The partitions also impart the required rigidity to the roof.

A floating roof pontoon is a variety of a floating roof. Tanks with pontoons are distinguished by a fixed roof and a simplified design of the pontoon. The latter is a hollow airtight disk whose diameter is 200 mm less than the internal diameter of the tank. The gap between the body of the tank and the pontoon is sealed by a special contrivance. The pontoon is made from steel or a polymer.

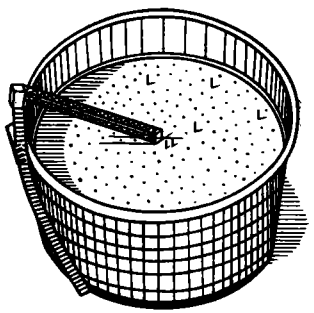

Fig. 111. Breathing tank

Horizontal cylindrical and spherical tanks are used to store liquefied gases and light-end gasoline fractions whose vapour pressure is much higher than atmospheric pressure. The industry supplies horizontal tanks with a capacity from 25 to 200 m^3 for a pressure of 0.72 and 1.76 MPa, and also spherical tanks with a capacity of 600 and 2000 m^3 for a pressure from 0.25 to 1.2 MPa.

Underground tanks made from precast reinforced concrete are employed for storing fuel oil. Their construction consists in installing prefabricated panels. Major shortcomings have come to light in the course of service of reinforced-concrete tanks, namely, it is difficult to remove settled water from them, and owing to leaky panel joints, the petroleum products get into the soil and contaminate it.

Preparation of Commercial Products. The commercial products of petroleum refineries are conditionally divided into two groups: products manufactured directly at technological plants (individual C_3-C_5 hydrocarbons, benzene, toluene, solid and liquid paraffin waxes, additives to lubricating oils, etc.), and products blended from various components. Components are blended to produce motor gasolines, lubricating oils, diesel fuel, and furnace oils. The number of components used for producing motor gasolines and lubricating oils reaches 12 to 15 at some refineries.

Commercial products are prepared in special facilities with the use of the following basic methods: (1) circulation in blending tanks;

(2) blending in apparatus with mixers; and (3) continuous compounding.

In the circulation method, the required components are delivered from the technological plants into special tanks and are then mixed by circulation; the latter continues until all the indices of the mixture correspond to the requirements which the commercial product must meet. Various additives are incorporated into the petroleum products in the blending tanks to improve the quality of the products. Ethyl fluid is introduced into gasolines in special units known as ethyl-mixing plants. The latter are installed along the railway tracks used to spot the tanks with the ethyl fluid. Special safety precautions must be observed in ethylation because tetraethyl lead is a strong poison.

The preparation of commercial products by circulation requires a large expenditure of electrical energy, and the mixing reservoir occupy a large territory. These shortcomings are eliminated by using continuous compounding systems for preparing commercial products. In this method, all the components of the product together with the additives are mixed in a pipeline in a strictly preset proportion. The product of the required quality forms directly in the mixing pipeline. The set of facilities for preparing commercial products by continuous compounding is called an **automatic blending station.**

The operator of such a station, directly from his control room, opens tne electrical gate valves on the tank outlets, at the inlets and outlets of the pumps, switches on the pumps, and sets the batching counters for supplying definite amounts of the components. The prepared product is delivered to the commercial tank farm.

Intershop Transportation of Petroleum and Its Products. Petroleum and its products are handled within a refinery in pipelines. The lines connecting the equipment inside a plant or shop are called intrashop ones, and those connecting different shops are called intershop lines or process piping.

Surface and underground lines are distinguished. The former are laid on low or high reinforced-concrete supports. When low supports are used, special crossings are installed at intersections with roads. The surface pipelines used to handle readily congealing products must be heated. To do this, the pipelines are laid in a common insulation with steam or hot water pipes (a companion).

Gravity flow or pumps are employed for moving products at a refinery. Gravity flow is used when allowed by the difference in the elevations of the locality. Pumping stations are located as close as possible to the tanks from which a product is taken. In addition to the pumping stations within the plants, the general refinery facilities also have pumping stations in the tank farms, loading and discharging racks, circulation water supply junctions, etc.

Safety Precautions. Loading, discharging, and pumping involve the moving of considerable amounts of combustible, explosive, and toxic substances. It is therefore very important to strictly observe the safety rules. Railway racks should be erected from non-combustible materials. Flammable and combustible liquids must be loaded at different racks. Every rack is provided with an independent bypass siding that in case of a fire makes it possible to rapidly uncouple a burning tank car and switch it to a safe place. Emergency gate valves are installed at a distance of 15-20 m from racks. Should a fire break out, these valves are operated to instantaneously shut off the supply of the product to the rack.

Special precautions must be taken when shipping the very toxic ethylated gasolines.

To reduce the fire hazard, the maximum tolerated capacity of the tank farms is established. For example, the total capacity of the tank farm storing explosive and combustible liquids in the zone of the technological plants must not exceed 6000 m^3 in the USSR. The total capacity of the commercial product farm for liquefied gases is limited to 8000 m^3, and it must be at a distance of at least 500 m from the main territory of a refinery.

The fittings on the intrashop pipelines, as well as the gate valves on the intershop pipelines used to handle liquefied gases, toxic liquids, gasoline, and products having a temperature above 200 °C when pumped must be made from steel.

12.3. Power Supply

12.3.1. Heat Supply

Consumers. A modern refinery is a major user of heat; during a single hour it uses up to 500 and more tonnes of steam. The latter is employed for technological purposes, namely, in rectification columns for lowering the boiling point of products, in pipe furnaces for pulverizing the fuel, in steam jet ejectors for creating a vacuum, in heaters and boilers for heating products, etc. Steam is also used as an energy source for driving pumps and compressors.

Parameters of Heat Carriers. Steam having various parameters (pressure, temperature) is required for the plants and objects of refinery facilities. The choice of these parameters depends on the features of the production process. For example, petroleum distillation columns are supplied with superheated steam, while steam whose temperature exceeds the final heating temperature of a product by 20-30 K is used for heating products in heat exchangers. Pipelines carrying steam with three or four parameters are laid on the territory of a refinery. If consumers need steam having a different pressure,

it is lowered by special reducers. Refineries employ steam with the following parameters:

1. Steam with a pressure of 2.5-4.0 MPa at a temperature of 250-435 °C is intended for the turbine drives of compressors and for heating petroleum products to above 160 °C when it is impossible to use flame heating or heating with an intermediate heat carrier. This steam is used in catalytic reforming, alkylation, and polymerization plants.

2. Steam with a pressure of 1.0-1.3 MPa and a temperature of 200-300 °C is employed when heating products, heating pipelines and tanks with highly viscous and easily congealing products (fuel oil, tar, asphalts), and for fire extinguishing. Steam having these parameters is also used in the steam drives of pumps.

3. Steam with a pressure of 0.2-0.7 MPa and a temperature of 120-220 °C is intended for heating products to 60 °C, fire extinguishing, and heating technological lines.

Industrial district heating and power plant water with a temperature gradient of 150-70 °C and 130-70 °C is employed for the low-temperature (up to 60 °C) heating of products, pipelines, and gutters. The use of this water is preferable to using steam because the conditions of operation of the water companions are less rigorous. At many refineries, the pipeline heating systems are being transferred from steam to water.

Steam or hot water is used for hot water supply and the heating of buildings. Hot water is more convenient because steam heating does not enable accurate temperature regulation to be achieved. Water heating and hot water supply systems are simpler to connect to heat mains.

Sources of Heat Energy. Heat energy is supplied to refineries by central heating-and-power plants (CHPP), boiler houses, and plants for the utilization of secondary energy resources.

Refineries receive not only heat, but also electrical energy from central heating-and-power plants. The combined production of electrical and heat energy is considerably more efficient than their supply separately, when electrical energy is produced at condensation heating and power plants, while heat (steam and hot water) is produced in boiler houses. At central heating-and-power plants, the heat of the working substance (steam or gases) having an increased potential (a high pressure and temperature) is initially used to produce electrical energy in turbogenerators, and then the heat of the spent working substance having a lower potential is used for supplying heat.

At most central heating-and-power plants forming a part of a refinery's facilities, fuel oil is employed as the fuel. It is supplied via a pipeline from the refinery's product shop. Meter units are set up for recording the amount of delivered fuel. Stores for a reserve

supply of fuel that are filled with fuel oil in summer are created at the heating-and-power plants to meet their peak demands for fuel.

To utilize fuel gas, at some refineries systems for supplying this gas to the heating-and-power plants are erected. These systems make it possible to substantially reduce the losses due to burning in flares, improve the economical indices of the main production facilities, and diminish air pollution. Sometimes the fuel gas is delivered to a heating-and-power plant at a rate of 100-150 thousand tonnes a year.

Considerable amounts of steam and hot water can be obtained by utilizing the secondary energy resources. It has been computed that the complete utilization of the secondary energy resources would make it possible to meet 70-80% of the demands of a refinery for heat energy. At present, however, this figure at refineries is only 5-7% of the total needs.

The main sources of secondary energy resources are (1) the flue gases of pipe furnaces; (2) the hot streams of liquid and gaseous petroleum products whose heat is not utilized in the technological cycle, but is removed in coolers by air or water; and (3) the steam condensate returned from the technological consumers and spent steam.

The shortcomings of flue gases as a source of secondary energy resources include the fact that large volumes of the gases are needed to produce a unit of steam, and also their high corrosive activity (especially of gases obtained in the combustion of sulphurous fuels).

Air heaters or waste-heat boilers are erected for utilizing the heat of flue gases. The merits of the air heaters are the simplicity of their design, safe operation, and the absence of the necessity of installing additional equipment (deaerators, pumps, heat exchangers). The supply of hot air reduces the specific consumption of the main fuel in the furnace units and improves the burning process in them (especially when using heavy liquid fuel).

The installation of air heaters utilizing the heat of the flue gases increases the efficiency of furnaces by 10-15%.

In waste-heat boilers, the heat of the flue gases is employed for the generation of steam. These boilers can be erected separately, or built into pipe furnaces.

The problem of the need to utilize the heat of flue gases is solved on the basis of economical considerations. Heat utilization is economical for furnaces with a heating rate exceeding 25 GJ/h.

Accumulated experience enables us to recommend the following schemes for the rational utilization of the heat of flue gases:

(1) at a gas temperature above 500 °C, waste-heat boilers should be employed;

(2) if the amount of flue gases exceeds 40 000 m^3/h, it is better to use waste-heat boilers with forced circulation to generate steam

(with a smaller amount of flue gases, waste-heat boilers with natural circulation are used);

(3) to utilize the heat of flue gases with a temperature at the furnace outlet below 500 °C, it is good to employ air heaters;

(4) the greatest economical effect is achieved when a two-unit installation consisting of a waste-heat boiler and an air heater is employed.

Heat Piping. The heat piping of a refinery is conditionally divided into external and internal piping. The former includes the steam and hot water lines from the heat source (central or district heating-and-power plant) up to the refinery's territory, while the internal piping includes the lines on the refinery's territory. The internal piping, in turn, can be divided into interplant and intraplant lines. The interplant piping includes trunk lines and branches from them to the direct consumers of heat energy. The intraplant piping connects the apparatus and buildings inside a technological plant or an object of the general refinery facilities.

Depending on the kind of heat-carrying agent, the heat piping of a refinery is divided into steam, water lines, and lines for collecting and returning the condensate (steam return lines).

Steam with various parameters is fed from the headers of a heating-and-power plant to consumers via trunk steam pipelines. Their diameter depends on the amount of steam and its parameters. Plants using a lot of energy are located near the heating-and-power plant. Steam line layouts are divided into radial and envelope ones.The latter are most popular at refineries because they ensure a more reliable supply of steam to the plants.

At present, the technological and heat lines at refineries are laid together on common trestles. This substantially cuts the number of trestles and the cost of their erection.

Collection, Treatment, and Return of Condensate. Most refineries are provided with systems for collecting, treating, and returning steam condensate to the sources of steam supply (heating-and-power plant or boiler house). The amount of recycled condensate varies from 12 to 55% of the amount of steam consumed. An increase in the percentage of condensate recycling and the setting up of a rationally organized system for its collection, treatment, and return yield a considerable saving of heat energy.

When estimating the economical expediency of collecting and returning the condensate, one must also have in view that instead of the unreturned condensate, the same amount of fresh water must be added to the feedwater of the heating-and-power plant boilers. This water must first be purified of mechanical admixtures and then softened, which raises the cost of steam generation.

12.3.2. Electrical Power Supply

Consumers. The total installed capacity of the consumers of electricity at a modern refinery is 200-300 MW.

Electrical power is consumed at refineries by equipment of the technological plants and objects of the general refinery facilities (pump and compressor houses, repair and mechanical shops, laboratories, administrative buildings, etc.). The main consumers are power installations. Electrical power is also used for illumination and for service needs.

The power equipment includes the motors driving the pumps, compressors, fans, blowers, pipeline fittings, mechanical handling and other mechanisms.

Sources. The refinery's central heating-and-power plant is generally the source of electrical power for the refinery. The dependability of supply is ensured by means connecting to the electrical mains of the given district's power supply system.

The capacity of a central heating-and-power plant is usually determined by the demand for steam and heat energy for the refinery's needs. The overall electrical power of a CHPP most frequently substantially exceeds the peak consumption of the refinery, and the surplus electrical power is transmitted via the high-tension lines of the electric power system to other objects of the district.

In addition to the connection of a refinery to the electric power system via its central heating-and-power plant, a 110-35/6-10-kV substation is generally erected at a refinery that is not combined territorially with the heating-and-power plant. During the initial period of erecting the refinery and power plant, this substation is the only source of power supply. Subsequently, it is used as a third independent source of power supply.

Power Supply Reliability Categories. The consumers of electrical power are divided into three categories with respect to the requirements of the reliability of power supply.

The first category includes consumers for which an interruption in supply may cause a hazard for the life of people and bring considerable harm to the national economy. These consumers must be supplied with electrical power from two independent sources, and an interruption in supply is tolerated only during the time needed for the automatic switching on of the standby source of supply. The most responsible consumers (electrical gate valves on the compressed air lines of automation systems, on the lines feeding fuel into a furnace, the electric motors of pumps feeding stock to furnaces for thermal cracking and pyrolysis, etc.) are included in a special group of the first category. A third, independent power source is provided for these consumers.

The second category includes consumers for which an interruption

in power supply is associated with large-scale idle time of the workers, mechanisms, and means of transportation. When the supply of power stops, the standby source for these consumers is generally switched on automatically, but manual control by the staff on duty is also tolerated.

The third category includes all other consumers. The supply of power to them may be interrupted during the time needed for repairs and renewing the supply of power.

Electrical Power Supply and Distribution Systems. The power supply system of a refinery consists of the external and internal systems. The external power supply system includes a central heating-and-power plant (CHPP), step-up substations at the CHPP for connection to the refinery and the power system, external power transmission lines to the refinery's switching stations and main step-down substations, step-down transformer substations supplied with power directly from the 35-110-kV mains of the power system, and feeding power transmission lines to them. The system of internal power supply includes switching stations, step-down shop transformer buildings, and the refinery's high-tension distribution network.

Power can be distributed over a refinery's territory using either a radial or trunk-line scheme, the former being more reliable.

The high-tension power transmitted to a refinery from a CHPP or a district substation of the power system must be transformed at the place of consumption into power at a reduced voltage of 380/220 or 6000 V. For this purpose, step-down transformer substations with a voltage of 110/6, 35/6, and 6/0.4 kV are erected at the refinery. A transformer substation consists of transformers, switching and auxiliary facilities, and means for control, protection, and signalling.

Electrical Illumination. The following systems are used at a refinery:

(1) general illumination for providing an illuminance sufficient for conducting the production process;

(2) local illumination, used when the provided general illumination does not provide adequate illuminance of individual workplaces;

(3) a combination of general and local illumination.

Working and emergency illumination are distinguished. Working illumination is intended for ensuring normal conditions of vision for the operating staff and for creating the required illumination of passageways. It also includes the outdoor illumination along the refinery's boundaries.

The emergency illumination is intended to provide a possibility of continuing work or safely evacuating workers when the working illumination suddenly goes out because of an accident. Emergency illumination is provided for all explosive and fire hazardous plants

in which the sudden switching off of the working illumination may cause an explosion, fire, accidents, or violation of the production process.

12.3.3. Fuel Supply

The fuel used for the pipe furnaces at refineries includes fuel oil of their own production, gas produced as a by-product in the technological plants of the refineries, and natural or casing-head gas supplied from elsewhere. The consumption of fuel averages 50 to 70 kg per tonne of processed petroleum. Consequently, a refinery handling 12-16 million tonnes a year uses 600-1100 thousand tonnes of fuel during the same period.

A merit of gaseous fuel is the possibility of easily purifying it from sulphur-containing compounds. The formation of sulphur dioxide in the combustion of gaseous fuel has been reduced to a minimum. The resources of gaseous fuel at a refinery depend on the flow diagram of the enterprise and on the provision of systems for collecting and processing the gas.

Pipe furnaces are designed for the use of liquid, gaseous, or mixed (combined) fuel. The choice of the kind of fuel depends on the design of the furnace, the type of burners used, the requirements for the protection of the environment, and the need to use low-pressure gas or a highly viscous residue among others directly at a plant.

Gas-distributing stations are erected at refineries for regulating the composition and pressure of the gas. These stations receive gases from plants of the same type via independent pipelines. Separate headers are installed for gases from plants for primary distillation, reforming, hydrofining, catalytic and thermal cracking, and coking. The gases delivered to a station are passed through reducers, mixed, and supplied to consumers along special headers under the required pressure.

Gas containing hydrogen sulphide is treated in special plants before being delivered to a gas-distributing station. If the gas is to be used for dining rooms and the gas heating of residential buildings, it should be purified to a level meeting the relevant requirements to household gas, and be odorized.

To supply liquid fuel to technological plants, refineries are provided with systems including facilities for the storage, pumping, heating, and distribution of the fuel among its consumers.

The fuel is taken in by pumps from the tanks and is fed through heaters to the consumers. Heating is needed to lower the viscosity of the fuel to the required value. To maintain a definite pressure, temperature, and viscosity in the fuel line, the excess fuel is returned to the tanks via recirculation lines.

One or more tanks are provided for fuel storage. The amount of fuel in them should be sufficient to supply the furnaces during two

or three days. If the refinery's fuel is supplied from several sources, at least two tanks are required for mixing the separate streams. Sometimes the fuel is prepared by mixing its components directly in the pipeline.

The pressure in a line feeding fuel to furnace burners is at least 0.3 MPa, which ensures regulation of furnace operation and the required degree of atomization of the fuel. To guarantee the required pressure before the furnaces, furnace fuel oil is discharged from the fuel facilities at a pressure of 0.9-1.1 MPa.

The temperature imparted to fuel in a heater depends on what kind of fuel is being used for the furnaces. To achieve the required degree of atomization of the fuel, its viscosity is lowered in the heater to 30-40 centistokes.

With an increase in the distance from the fuel facilities, the temperature of the fuel oil lowers, and the liquid fuel arrives at the remotest plants with a lower temperature than at the source. Heaters are installed where needed to lower the viscosity to the required value.

12.4. Water Supply and Sewerage

Petroleum refineries are characterized by a large consumption of water (up to 1.0 m^3 of fresh water per tonne of processed petroleum) and the formation of a considerable amount of sewage (effluents).

Water Supply. Various water supply systems are created at refineries to provide water to consumers. They include circulating, fresh, potable, and fire-fighting water systems.

The system of circulating water supply is intended for meeting the production needs of the refinery. The system is based on the multifold use of water once taken from a water basin. Hot water after the condensers and coolers flows by gravity or under pressure to the circulation water supply units, where it passes through emergency petroleum separators and special cooling facilities such as ponds, spray pools, or water-cooling towers. The latter are the most efficient cooling facilities.

The water-cooling towers of the circulation system differ in design. The water in them flows down sprayed surfaces of the packing (slats, hurdles, etc.) in the form of a thin film or droplets. In some designs, nozzles are used to spray the water. The flowing down water is cooled by the natural draft of the outside air (natural-circulation towers) or by an artificial draft created by fans (mechanical-draft towers). Figure 112 shows a multiple-section mechanical-draft tower in which the water is cooled from 45-50 to 25-28 °C. The cooled water is collected in the pools of the towers and is returned to the consumers by a pump under a pressure of 0.3-0.4 MPa.

Large modern refineries have several systems of circulation water

supply: (1) for equipment connected with the processing of petroleum and its products; this water in cases of emergency is supplied from plants without purification from admixtures of petroleum and liquid petroleum products; (2) for equipment of gas plants, and for cooling the bearings of pumps and compressors; this water is not contaminated by petroleum products; (3) for barometric mixing condensers; the water contains large amounts of petroleum products,

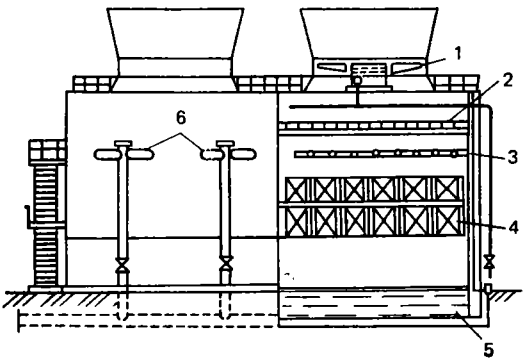

Fig. 112. Multiple-section mechanical-draft water-cooling tower:
1—fan; *2*—water-trapping grids; *3*—water-distribution system; *4*—sprayer; *5*—cooled water pool; *6*—feed pipes

while when sour petroleum is processed, it also contains hydrogen sulphide; and (4) for equipment from which paraffin wax and greases may get into the water.

The employment of several systems improves the conditions of polluted water treatment at the circulation water-supply units. The losses of water in the circulation systems are compensated by adding fresh water from basins or purified effluents.

To prevent the precipitation of calcium and magnesium salts from the circulation water, the formation of scale in the heat-exchange equipment, and the development of biological organisms in the water, the latter is treated with phosphates, an acid, vitriol, and chlorine.

Fresh water is used for feeding the boilers, preparing reagents, washing some products, and replenishing the circulation water systems. The fresh water system includes means for taking in water from a basin—a river, lake, etc. (water intake), first, second, and sometimes third lift pump houses, filtering structures, suction tanks and pipelines.

Potable water is used for drinking, in the showers and lavatories. The source of this water is ground water or river water subjected to special treatment.

The fire-fighting water piping system includes a pump house and pipelines laid along all the roads and enveloping the entire refinery. The fire-fighting water piping is outfitted with fire hydrants installed according to the relevant calculations, but at most 150 m apart. At many refineries, the fire-fighting piping is combined either with the product fresh water pipeline, or with the potable water one. Sometimes special fire-fighting water systems are installed.

The supply of water for fighting fires is stored in special, quite often underground reservoirs and fire-fighting ponds. Standards exist that determine the required supply of water in these ponds and the number of fire pumps. The systems of circulation water supply, fresh water supply, and purified effluents are reserve sources of water for fighting fires.

Sewerage. The effluents of petroleum refineries have a high toxicity. This is why the proper solution of the problems of their disposal and treatment is of paramount importance. The effluents of a refinery are divided into three kinds, namely, production, storm-water, and domestic-fecal effluents (sewage).

The production effluents are discharged from a refinery via two main systems of industrial sewerage. The first one (production and storm-water) collects the non-toxic petroleum-containing effluents that form (a) in cooling the glands of the pumps; (b) when washing the gutters and floors of the production premises; (c) when washing and steaming equipment; and (d) when rain falls on territory contaminated by petroleum products. Steam condensates and water from mixing condensers and scrubbers contaminated by petroleum products are also directed into this system.

The second sewerage system is intended for effluents containing salts, mineral or organic acids, sulphurous compounds, phenols, etc. It includes several separate networks used to discharge effluents with different contaminants: (a) a network of electrical desalting plant effluents gathering the effluents from these plants and the water from feed stock tanks; (b) a network for sulphurous and alkaline effluents; (c) a network of sulphuric acid effluents from the sulphuric acid shop and the plants for the sulphuric acid treatment of petroleum products; and (d) a network for effluents contaminated by fatty acids, paraffin wax, phenol, and other chemicals.

The effluents of both systems of production sewerage are discharged into treatment facilities along gravity-flow or pressure pipelines.

The storm water from unbuilt-up territory (roads, sidewalks, ground surfaces) and the roofs of separately standing buildings is discharged to the treatment facilities via a special sewerage system. The effluents from service premises, dining-rooms, and the lavatories of the technological objects are pumped to the treatment facilities by a system of service and fecal sewerage.

Effluent Treatment. At the treatment facilities of a refinery, each effluent is treated according to its own scheme depending on the degree and nature of its contaminants.

Effluent treatment of the first sewerage system consists in mechanical settling and filtration (or flotation) of the water to trap mineral and organic substances.

The effluents pass consecutively through a sand trap that retains the coarse suspended particles and through petroleum traps that retain the main part of the petroleum products. After the traps, which are intended for two-hour settling, the effluents pass through ponds for additional settling, and are then fed for filtration and flotation. It is recommended to additionally subject the effluents of the first system to biological treatment after the mechanical treatment. Biological treatment takes advantage of the ability of some species of microorganisms to decompose petroleum and its products. At some refineries, the effluents of the first system after biological treatment are used to replenish the circulation water supply systems instead of fresh water.

The effluents of the second system after mechanical treatment following a scheme similar to what has been described above are neutralized, averaged, and are additionally treated in the biological treatment facilities together with the service and fecal effluents. The latter before being delivered for biological treatment are purified mechanically from admixtures.

The petroleum products retained in the treatment facilities are returned to the refinery for repeated processing.

Before being returned to the refinery, these products are freed from water by settling in special tanks. The latter receive the petroleum products trapped in the mechanical treatment of the effluents of the first and second systems, and also those trapped in the circulation water supply units. In these separation tanks, the water-containing products are heated to 60-70 °C and left to settle at this temperature. The duration of a cycle of treating these products is three days.

12.5. Air and Inert Gas Supply. Flare System. Storage Facilities

12.5.1. Air Supply

Flow Rate. Considerable amounts of compressed air are used for various needs of a refinery. It is employed for the pneumatic systems of automatic regulation and control, for catalyst regeneration in hydrofining, catalytic reforming, and cracking plants, for removing coke deposits from pipe furnace coils, and so on.

The consumption of compressed air by the automatic control instruments averages 0.5-1.0 m^3/h per instrument. Depending on the intricacy of the flow diagram of the petroleum processing plant and, consequently, on the number of instruments at this plant, the consumption of air in it ranges from 1 to 8 m^3/min. In combined plants with from five to seven various processes, the consumption of air is 1.5-2 times higher.

Air Supply Systems. Consumers tender different requirements to the pressure of the air supplied to them. The standards for technological designing require that the pressure of compressed air for general purposes (technological) be 0.8 MPa at the pressure source and at least 0.6 MPa at the consumer. The compressed air for the control and automation instruments should have a pressure of 0.7-0.8 MPa at the pressure source and at least 0.6 MPa at the consumer. The temperature of the air should be 30-40 °C. In catalytic cracking plants, the pressure in the regenerators does not exceed 0.06-0.08 MPa, therefore the air can be supplied at a low gauge pressure.

The air is supplied from centralized and local blower and compressor houses. Local blower and compressor houses are provided in catalytic cracking and asphalt plants.

Air compressor houses are erected at refineries for the centralized supply of air to consumers. When determining their number, one must take into consideration the size of the refinery's territory, the distance from the compressor house to the remotest consumer of air (it is essential that the pressure losses in the piping up to a consumer should not exceed 0.2 MPa), and the sequence in which the various objects are to be placed into service at the refinery.

The number of compressors in a compressor house is chosen depending on the demand for air, the capacity of serially manufactured compressors, and the need to ensure the uninterrupted supply of air to the constant consumers. A 100% standby capacity should be provided for the compressors supplying air for the automatic control instruments.

The air intake devices are arranged away from the production premises in a zone protected from solar radiation and heat sources. The air is taken in at a height of at least two or three metres above the surface of the ground. The intake device is covered by a special cap preventing the ingression of atmospheric precipitation. The instruments for automatic control and regulation must be supplied with purified and dried air. This is why the air compressor houses are provided with equipment for drying the air and with filters.

Air is dried at refineries by the adsorption method. Other methods (cooling, absorption, chemisorption) are used very rarely. The adsorption method makes it possible to achieve a very low residual humidity of the air (corresponding to a dew point of minus 70 °C and lower). Silica gel, active alumina, or zeolites are used to dry the compressed

air. Adsorption drying of air is performed as a cyclic process on a fixed adsorbent bed. The drying systems include two or more adsorbers. When air is being dried in one of them, the adsorbent is regenerated in another one.

The filters in the suction line of a compressor are intended for removing dust particles over five or six micrometres in size from the air. The most popular are dust filters consisting of a set of magazines or cylinders wetted in special oil, and filters made from fibre glass, polyamide, and cellulose fibres.

General refinery compressor houses also accommodate high-pressure compressors for supplying the air needed for regeneration of the reforming and hydrofining catalysts.

An important element of an emergency-free system of supplying air for the automation and control instruments are buffer reservoirs (receivers) installed at the technological plants and intended for storing a supply of compressed air.

All refinery plants are outfitted with buffer reservoirs designed for storing a one-hour supply of compressed air for the control instruments.

12.5.2. Inert Gas Supply

General. Systems for supplying an inert gas (nitrogen) have been erected during recent years at most Soviet refineries. This gas was initially employed for regenerating the reforming and hydrofining catalysts; the appearance at refineries of large production facilities supplying inert gas is associated with the wide introduction of these processes into petroleum refining. Subsequently, an inert gas found greater and greater use for creating "cushions" in tanks employed for storing readily oxidizable products, for scavenging equipment before repairs, and when conducting pneumatic tests of the strength and tightness of piping.

Supply Systems. An inert gas is produced at a refinery in one of two ways:

(1) by burning a hydrocarbon gas in a stream of atmospheric air with a minimum excess of the latter with the subsequent purification of the formed flue gas from carbon oxides and drying;

(2) by separating air into nitrogen and oxygen at low temperatures.

Plants of the first type were built at Soviet refineries in 1957-1972. The feed stock of the first of these plants was hydrocarbon gas from the general refinery network having a heat of combustion of 40 000 kJ/m^3. To lower the heating value of the gas, cold flue gas was added before feeding it into the furnace. The capacity of the plant was 2000 m^3/h.

Since the projecting assignment required that the gas produced at this plant be dry and contain not over 0.5% (by volume) of oxygen,

its flow diagram provided for purification from oxygen on a platinum catalyst and drying on bauxites.

Subsequently, the requirement was advanced that the content of carbon oxides (CO and CO_2) in the inert gas be lowered, and the plants producing the inert gas were additionally outfitted with reactors in which the CO is oxidized to CO_2 on a hopcalite catalyst (a mixture of manganese and copper oxides). Scrubbers using alkaline washing were provided to remove the carbon dioxide.

In connection with the development and widespread introduction of new modifications of an alumino-platinum catalyst, it became necessary to further lower the content of carbon monoxide, which is a very strong poison of this catalyst.

This condition is met the best by nitrogen produced by separating air in special plants (nitrogen-oxygen stations).

The air-separating plants differ in the way of refrigeration (the refrigeration cycle), the way of purifying the air from carbon dioxide and moisture, and so on. A large number of stationary and mobile air-separating plants are in service with an oxygen capacity of 15 to 35 000 m^3/h and a nitrogen capacity of 20 to 48 000 m^3/h. Depending on the products obtained, air-separating plants are divided into nitrogen, nitrogen-oxygen, and oxygen ones, their names indicating what are their products.

Nitrogen and nitrogen-oxygen plants are erected at refineries. The oxygen produced together with the nitrogen can be used in some oxidation processes, for treating effluents, etc.

The consumption of an inert gas at a refinery is irregular. It grows sharply during the regeneration of a catalyst, when performing scavenging, pressure tests, and pipeline strength tests.

To meet the peak demand for nitrogen, gas holder farms are erected at refineries. They consist of wet or dry gas holders. The capacity of the farm is determined proceeding from the need to meet the demand for the inert gas during catalyst regeneration (with a view to the production of the inert gas during this period by the existing plants).

At refineries with a capacity of 12-18 million tonnes a year, gas holder farms are needed containing 40-50 thousand cubic metres of the inert gas.

12.5.3. Flare System

Designation. Flare systems are erected at refineries to trap and utilize the technological discharges of flammable and explosive vapours and gases. The flare system caters to the following streams:

(1) emergency discharges from safety valves or other safety appliances installed on equipment of the technological plants, tanks in the liquefied gas tank farms, etc.;

(2) discharge of the products from separate equipment and systems prior to their repairs, shutdown, etc.;

(3) periodic scavenging of individual apparatus, pumps, and compressors;

(4) discharges of combustible gases and vapours that for some reason or other cannot be utilized directly in production, directed into the refinery's fuel network, or for subsequent processing.

Everything possible must be done to eliminate constant discharges of combustible gases and vapours into the flare system. But in practice this requirement is not always complied with.

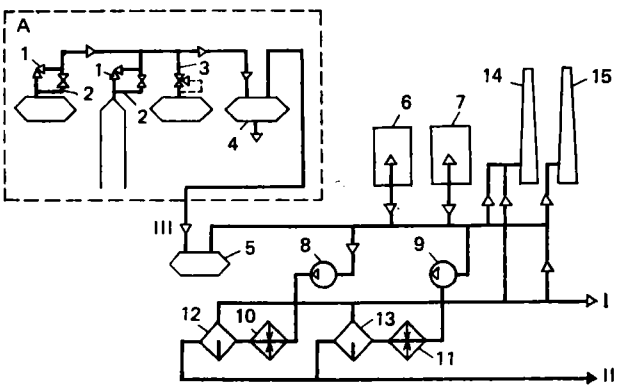

Fig. 113. Schematic diagram of a refinery's flare facilities:
A—collecting of the flare gas inside a plant; *1*—safety valve for emergency discharge; *2*—gas discharge line when scavenging and emptying apparatus; *3*—line for technological discharge into flare line; *4*—flare gas separator inside plant; *5*—condensate separators; *6*, *7*—gas holders; *8*, *9*—compressors; *10*, *11*—coolers; *12*, *13*—separators; *14*, *15*—stacks for open burning (flare stacks); *I*—gas to fuel network; *II*—gas condensate to processing plant; *III*—flare gas from plants and other objects

Composition of General Flare System. The general flare system of a refinery includes the pipelines from the technological plants and liquefied gas tank farms to the general refinery flare pipeline (header); the general refinery flare header; the flare facilities; flare stacks for burning the flare gas; and a pipeline for withdrawing the products trapped in the flare facilities.

Up to the early 1950's, refineries had no systems for trapping emergency discharges, and they were burned in a flare stack. Later special flare facilities began to be set up that were intended for utilizing the discharges into the flare system. A diagram of flare facilities is shown in Fig. 113.

The flare gas flows into condensate separator *5*, next into gas holders *6* and *7* and into the suction lines of compressors *8* and *9*.

The gas compressed by the compressors is cooled and partly condenses. The flare gas condensate from separators *12* and *13* is with drawn for processing in a gas-fractionating plant, while the gas is delivered into the fuel network of the refinery.

The operation of the compressors is regulated by a system of the relevant instruments. When the level of the gas in the gas holders lowers, the operating compressors are switched off in turn, and are switched on again when the level rises. The excess amount of gas that for some reason or other cannot be directed into the fuel network is burned in stacks for open combustion (flare stacks) *14* and *15*.

Flare Stacks. Flare stacks are located with observance of the fire safety standards. The latter require that the territory within a radius of at least 50 metres from a stack must be graded and fenced in.

The site for a flare stack is chosen depending on the relief of the refinery's terrain, the whereabouts of the closest populated areas and cultivated lands, and the predominating direction of winds. The stacks are generally installed at the boundary of a refinery's territory.

With unorganized burning of gases in a flare, a large amount of products of incomplete combustion—carbon (in the form of smoke) and carbon monoxide is evolved. To eliminate the smoke and soot when burning gas in a flare, steam is fed into the stack to organize what is called "smokeless" combustion. To reduce noise when organizing smokeless combustion, superheated steam should be used instead of saturated steam because in the latter case the noise grows because of bursting of the water drops that get into the hot medium.

12.5.4. Storage Facilities

Designation. The storage facilities of a refinery are designed to supply it with materials, reagents, and equipment.

As regards their designation, stores are divided into material and technical ones and equipment ones. The former contain stocks of materials intended to ensure the production process, while the latter keep apparatus and equipment for objects of the refinery under construction.

As regards the kind of materials stored, general-purpose and specialized stores are distinguished at a refinery. The general-purpose stores handle metal, electrical materials, cables, hardware, etc. The specialized stores of a refinery include the reagent facilities, and the stores of catalysts, lubricating oils, and building materials. The stores can be located in closed, either warm or cold, buildings or on open areas.

Special devices such as racks, bins, and bunkers are used to store supplies of materials. The racks are intended for storing piece articles

New consolidated equipment has been employed in the ЛК-6У plant, namely, centrifugal compressors with a steam and electrical drive, air coolers with a high fin factor, valve-type rectification plates, and vertical sectional furnaces of a new design.

The use of the combined ЛК-6У plants instead of separately erected ones makes it possible to increase labour productivity by 45%, lower the amount of steel used to fabricate the equipment by 15-20%, and cut operating costs by 10-15%.

Combined plants КТ-1 for the deep processing of fuel oil have been erected at a number of Soviet refineries in recent years. They are intended for the processes of the vacuum distillation of fuel oil, hydrofining of the vacuum distillate, catalytic cracking of the hydrofined product, visbreaking of the tar, stabilization, and gas fractionation. The erection of such a plant makes it possible to produce 570 kg of light-end products and about 100 kg of liquefied gases from every tonne of fuel oil. The yield of the light-end products can be increased still more if a unit for producing methyl-*tert*-butyl ether from the butane-butylene fraction is included in the КТ-1 plant.

Combined systems of type КМ for the production of oils have been set up at various refineries. They combine the processes of hydroimprovement of the feed stock, deasphalting, selective treatment, dewaxing, hydroisomerization, and hydrofining to produce high-index base oils.

Combined systems for the production of ethylene and propylene are very efficient. They include processes of pyrolysis, the production of arenes, butadiene, cyclopentadiene, stock for the production of technical carbon (carbon black), and naphthalene.

The operation of large combined systems has brought to light some shortcomings: rigorous connections between the individual processes and, consequently, difficulties involved in bringing out to the proper regime; the possibility of disturbing normal operation in one of the sections when problems arise in other sections.

13.3. General Layout of a Refinery

The technological plants, and the objects of the general facilities and power facilities of a refinery are arranged on its territory in a definite order. A drawing of the territory allotted for the construction of a refinery is called its **general layout.** The latter shows all the buildings and structures of a projected refinery or of one in construction, highways and railways, underground and surface pipelines, power lines, communication lines, etc.

The general layout must ensure a minimal length of the technological pipelines, a minimal number of pumpings of the petroleum products, the best possible flow lines of the production process, and

convenience of operation. When compiling the general layout, one must take into consideration the fire and sanitary safety of operation, and the direction of the prevailing winds ("wind rose"). All the objects must have convenient approach roads. Since most of the objects of a refinery are intended for production processes dealing with flammable and explosive substances, they must be separated from one another by open terrain. The distance between separate objects and groups of objects is regulated by fire safety and sanitary standards.

The compilation of the general layout of a refinery is facilitated by dividing it into zones serving different purposes:

(1) the prerefinery zone accommodating the administrative and service buildings (the headquarters, training facilities, dining-room, fire station, gas rescue station);

(2) the production zone—the shops and plants of the basic designation;

(3) the auxiliary zone (repair-mechanical and container shops);

(4) the storage zone (stores of equipment, lubricating oils, reagent facilities);

(5) the product and feed stock facilities (the tank farms, pump houses, and railway racks for receiving the feed stock and shipping the products).

The purification facilities, product farm, and rack for loading liquefied gases into railway tank cars are located on separate sites beyond the limits of the refinery's fencing.

An example of the general layout of a petroleum refinery is shown in Fig. 117.

Central road *AA* divides the refinery into two parts, namely, a fuel and an oil ones. The fuel part contains the plants for atmospheric distillation *1*, catalytic reforming *3* and *4*, hydrofining diesel fuel *5* and kerosene *6*, dewaxing diesel fuel *7*, gas plant *8*, and isomerization plant *17*.

The oil part accommodates atmospheric and vacuum distillation plant *2* producing stock for oil manufacture, and plants for deasphalting *9*, selective treatment *10*, dewaxing *11*, and hydrofining of oils *12*. This part also contains facilities for the manufacture of paraffin waxes including plants for deoiling *13* and hydrofining paraffin wax and ceresine *14*. The stock for the plants of the fuel and oil parts is stored in intermediate farms *19*.

The refinery also includes plants for the production of asphalt *16* and elemental suphur *15*.

The refinery's objects are provided with circulation water from water supply units *18*, and with an inert gas and air from central compressor house *27*. The commercial products are prepared in the farms and in automatic blending stations *23* and *24*. The territory also accommodates stores *25*, flare *28* and reagent *29* facilities.

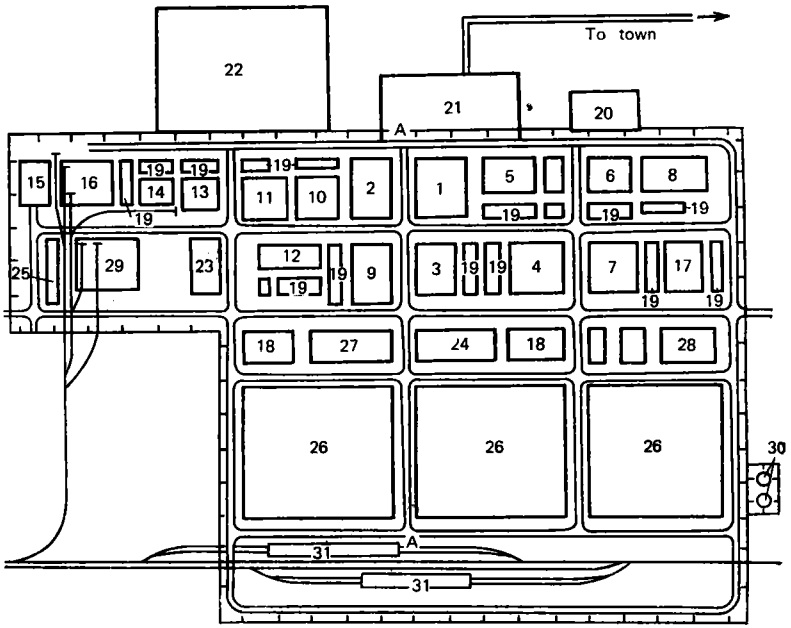

Fig. 117. General layout of a petroleum refinery:
1—primary atmospheric distillation plant ЭЛОУ-АТ; *2*—primary atmospheric and vacuum distillation plant ЭЛОУ-АВТ; *3*, *4*—catalytic reforming plants; *5*, *6*—hydrofining plants; *7*—dewaxing plant; *8*—gas plant; *9*—deasphalting plant; *10*—plant for the selective treatment of oils; *11*—oil dewaxing plant; *12*—oil hydrofining plant; *13*—deoiling plant; *14*—paraffin wax and ceresine hydrofining plant; *15*—production of elemental sulphur; *16*—production of asphalts; *17*—isomerization plant; *18*—circulation water supply units; *19*—intermediate farms; *20*—repair and mechanical shop; *21*—administrative unit; *22*—central heating-and-power plant; *23*, *24*—automatic fuel and oil blending stations; *25*—stores; *26*—product and feed stock depot; *27*—central compressor house; *28*—flare facilities; *29*—reagent facilities; *30*—flare stacks; *31*—railway racks

Central heating-and-power plant (CHPP) *22*, repair and mechanical shop *20*, and administrative unit *21* are outside the refinery's fencing. The CHPP is located as close as possible to the major power consumers. The objects requiring the presence of railway sidings (the plants producing asphalt and elemental sulphur, and the reagent facilities) are located in a compact zone near the refinery's boundary. This relieves the refinery's territory of the presence of railway lines, which provides safe passageway for the staff and eliminates restrictions for motor vehicle traffic.

13.4. Protection of Environment from Contamination by Refinery's Effluents

Great attention is given in the USSR to protection of the environment and improving the utilization of natural resources. Petroleum refining may result in contamination of the atmosphere and water

basins by harmful effluents. Contamination of the environment by products of petroleum refining is prevented by the introduction of a set of measures substantially affecting technology.

Protection of the Atmosphere. The harmful substances that may be discharged into the atmosphere in petroleum refining include hydrocarbons, hydrogen sulphide, carbon and nitrogen oxides, and ammonia. The main sources of contamination are the tank farms of petroleum and its products, the discharging and loading racks, circulation water supply units and purification structures, flare stacks for the open burning of gas, safety valves, and exhaust ventilation systems.

Over 40% of the total amount of hydrocarbons discharged into the atmosphere falls to the share of the tank farms. We have already indicated that the losses of hydrocarbons can be sharply reduced by employing tanks with pontoons and floating roofs to store petroleum and light-end products. At some refineries, the existing tanks are being outfitted with steel or polymer pontoons. This reduces the losses of petroleum and its products into the atmosphere by 85-90%.

The losses of hydrocarbons are also diminished by connecting tanks by equalizing lines. In this case, the vapour displaced from a tank into which a product is being pumped flows along the equalizing line into an adjacent tank instead of the atmosphere.

The operation of refineries has shown that it is quite often possible in general to do without the erection of tank farms and transfer to the use of "direct feed" from the plants supplying stock to those using it. The first stage in introducing direct feed at refineries was the stopping of the erection of intermediate farms before the primary distillation plants. Petroleum was supplied to the atmospheric and atmospheric-vacuum distillation plants directly from the tanks of the refinery's feed stock farm. Next it was decided not to erect intermediate farms between the units of catalytic reforming plants intended for the production of aromatics.

In the middle of the 1970's, many catalytic reforming and hydrofining plants were transferred to a direct-feed system. The stock was supplied to these plants directly from the primary distillation plants. At the same time, to prevent possible disruptions in the supply of stock to secondary processing plants, it is good practice not to do away with the intermediate tanks completely, but to erect small-capacity buffer tanks in which the stock is stored under a layer of nitrogen or purified hydrocarbon gas.

The circulation water supply units and the sewerage system treatment facilities are another source of contaminating the atmosphere with hydrocarbons and hydrogen sulphide, second in magnitude. At the circulation water supply units, losses are incurred owing to the evaporation into the air of the products fed to the water-cooling towers together with the circulation water. In the effluent treatment facilities, the open surfaces of petroleum traps, additional settling

pools, and sludge accumulators are sources of discharges to the atmosphere. The most efficient way of combatting losses is to reduce the contamination of the circulation water and effluents by petroleum and its products, covering of the petroleum traps, and the use of more efficient radial settling tanks. The erection of apparatus with air cooling instead of water shell-and-tube coolers, the replacement of stuffing-box seals with face seals, and the introduction of air-tight pumps and compressors without lubrication considerably reduced the losses of petroleum products with the water and effluents and, consequently, the discharge of harmful substances into the atmosphere at the water supply units and effluent treatment facilities.

The discharge and loading of petroleum and its products at railway racks are also attended by the discharge into the atmosphere of hydrocarbons displaced from the cars or evaporating. The most radical way of preventing such losses is to seal the discharge and loading operations, and provide the racks with devices for this purpose. Many discharge racks have already been outfitted with type УСН and АСН devices for sealed discharge. The introduction of systems for the sealed loading of cars has encountered a number of technical difficulties associated first of all with the diverse designs of railway tank cars.

The facilities for the open burning of unutilized vapours and gases, i.e. flare stacks (see Sec. 12.5) are a source of contamination of the atmosphere with sulphur, carbon, and nitrogen oxides. To reduce the harmful influence of the flare stack discharges, the following measures are taken at refineries:

(1) the discharge of vapours and gases into the flare system is reduced as much as possible;

(2) the products fed into the flare system are trapped and returned for repeated treatment;

(3) the conditions of combustion in the flare stack are improved.

To prevent the frequent operation of safety valves, the standards stipulate that the rated pressure at which these valves open should exceed the working pressure in the equipment by 15-20%.

The chimneys of the technological furnaces are the largest source of sulphur oxide discharges to the atmosphere. Sulphur oxides form when sulphur-bearing fuel oil or a hydrocarbon gas containing hydrogen sulphide is burned. To reduce the contamination of adjacent residential areas by sulphur dioxide, refineries erect plants for purifying fuel gas from sulphur, prepare fuel oil with a reduced sulphur content for their service needs, and cut the number and increase the height of chimneys.

The technological plants erected in the 1950's and 1960's were provided with chimneys 30-40 metres high, while later this height was increased to 100-120 m. An increase in the height of chimneys improves the conditions for the dispersion of the harmful substances

in the atmosphere and thus lowers their concentration in the air of towns and settlements.

The discharges from the regenerators of catalytic cracking plants may contain sulphur and carbon oxides, and catalyst dust. An efficient measure for preventing the formation of sulphur oxides is the removal of the sulphur from the feed stock of the catalytic cracking plants. All newly built plants for the catalytic cracking of sour stock are outfitted with units for the hydrofining of the vacuum distillate on an alumino-cobalt-molybdenum catalyst. The discharge of carbon monoxide is prevented by providing systems for its complete burning, while efficient trapping systems consisting of cyclones and electrical filters remove the catalyst dust.

Protection of Water Basins. Petroleum refineries and gas-processing plants relate to enterprises with a high demand for water and a considerable discharge of effluents into a water basin. Petroleum and its products, the chemical reagents used in the refining processes, and the wastes formed in processing make the effluents they get into toxic.

It has been established that the discharge of insufficiently treated effluents of refineries and gas-processing plants into water basins disturbs the oxygen regime and causes perishing of representatives of the river fauna, fish spawn, and fry. Caught fish may have acquired an unpleasant (kerosene) taste. The water of such contaminated basins can be used neither for potable, cultural, or welfare purposes, nor for production needs.

At the same time, the pollution of water basins is not an inevitable companion of petroleum refining. It can be avoided if in designing and operation preference is given to solutions with the best possible organization of the water supply and sewerage systems. This goal should be followed when selecting the diagram of petroleum processing at a refinery, the solution of the flow diagrams of individual production processes, and the choice of the apparatus and equipment.

The main ways of preventing the contamination of water basins are:

(1) the widespread use of circulation water supply systems;

(2) the maximum employment of air cooling instead of water cooling;

(3) the introduction of deep purification of the first system effluents with the subsequent return to the circulation water supply system;

(4) the exclusion of salvo discharges of effluents;

(5) the most complete possible utilization of technological condensates within plants;

(6) the exclusion of mixing condensers in the vacuum systems;

(7) the elimination of cooling hot effluents and condensates by directly mixing them with water;

(8) the inclusion of plants for evaporating water from salt-containing effluents and utilizing sulphurous and alkaline effluents and sludges in a refinery when necessary.

The observance of these requirements will reduce the consumption of fresh water to a minimum, and only purified effluents will be discharged into a water basin. The concentration of the residual pollutants in the effluents becomes so small that after the effluents are mixed with the water of the basin, the concentration of pollutants in the basin is substantially lower than the tolerated value. At refineries erected in the 1970's and 1980's, the consumption of fresh water per tonne of processed petroleum decreased from five to seven times in comparison with the refineries built in the 1950's.

The goal in combatting water basin contamination is the creation of a refinery that would operate without discharging production and storm sewages into a water basin and would use practically no fresh water. Such a refinery not only has obvious merits from the viewpoint of environment protection, but also can be located at any point in the closest possible proximity to the regions of petroleum product marketing.

RECOMMENDED LITERATURE

Bland, W. F. and Davidson, R. L. (eds.). *Petroleum Processing Handbook.* New York: McGraw-Hill (1967).

Buckley, P. S., Luyben, W. L., and Shunta, I. R. *Design of Distillation Column Control Systems.* Instr. Soc. of America (1985).

Chernozhukov, N. I. *Tekhnologiya pererabotki nefti i gaza* (The Technology of Processing Petroleum and Gas), Part 3. Moscow: Khimiya (1978).

Distillation Control. New York: McGraw-Hill (1984).

Ganapathy, V. *Unit Operations of Chemical Engineering.* New York: M. Dekker, Inc. (1984).

Gruse, W. A. and Stevens, D. R. *The Chemical Technology of Petroleum.* New York: McGraw-Hill (1960).

Gurevich, I. L. *Tekhnologiya pererabotki nefti i gaza* (The Technology of Processing Petroleum and Gas), Part I. Moscow: Khimiya (1972).

Incropera, F. P. and De Witt, D. P. *Introduction to Heat Transfer.* New York: Wiley (1985).

International Petroleum Encyclopedia. Penn Well Publ. Co. (1982).

Kosak, J. R. (ed.). *Catalysis of Organic Reactions.* New York: M. Dekker (1984).

Lastovkin, G. A. Radchenko, E. D., and Rudin, M. G. (eds.). *Spravochnik neftepererabotchika* (A Handbook for a Petroleum Refiner). Leningrad: Khimiya (1986).

Meyers, R. *Handbook of Synfuels Technology.* New York: McGraw-Hill (1984).

Nelson, W. L. *Petroleum Refinery Engineering.* New York: McGraw-Hill (1958).

Mukhlyonov, I. P. *A Practical Course in Chemical Technology.* Translated by V. Vopyan. Moscow: Mir Publishers (1982).

Pyrolysis: Theory and Industrial Practice. New York: Academic Press (1983).

Rudin, M. G. and Drabkin, A. E. *Kratkiĭ spravochnik neftepererabotchika* (A Concise Handbook for a Petroleum Refiner). Leningrad: Khimiya (1980).

Shaheen, E. I. *Basic Practice of Chemical Engineering.* Int. Institute of Technology (1984).

Smidovich, E. V. *Tekhnologiya pererabotki nefti i gaza* (The Technology of Processing Petroleum and Gas), Part 2. Moscow: Khimiya (1980).

Treybal, R. E. *Liquid Extraction,* 2nd ed. New York: McGraw-Hill (1963).

Treybal, R. E. *Mass-Transfer Operations,* 3rd ed. New York: McGraw-Hill (1980).

INDEX

Absorbents,
  gas drying, 277
  gas separating, 278
  oil treatment, 342
Absorption, 278f
Acetylene, heat of combustion, 59
Acidol, 377
Acids,
  asphaltogenic, 46
  definition, 209
  naphthenic, 38
  petroleum, 38f, 376ff
    salts, 39
    uses, 39
Acridine, 44
Additives, 372ff
  anticorrosive, 99
  antifoam, 102
  anti-icing, 93
  antioxidant, 90f, 99
  antiscuff, 101
  antiwear, 93, 101
  detergent, 101f
  dispersing, 101f
  fuel, 84
  lubricating oil, 99ff
  oil, 84
  phosphorus antiscuff, 373ff
  versatile, 102f
Adsorbents, 303f, 309, 342
Adsorption, 61, 279, 303ff, 342ff
Agents, antiknock, 88
Alkanes, 26ff
  adsorption by zeolites, 304
  aniline point, 68
  antiknock property, 89
  catalytic cracking, 216
  cetane number, 95
  content in petroleums, 25ff
    determination, 69f
  dehydrocyclization, 234
  gaseous, 26f
  Gibs energy, 166
  hydrocracking, 254
  isomers, 27f
  liquid, 27f
    extraction on molecular sieves, 303ff
  octane number, 89
  physical constants, 68
  pyrolysis, 199
  solid, 28ff
  thermal transformations, 170f
Alkenes,
  antiknock property, 89
  catalytic cracking, 216
  cyclodehydrogenation, 234
  octane number, 89
  oligomerization, 292ff
    catalysts, 293
  polymerization, 292ff
  thermal transformations, 172ff
Alkylation,
  alkanes with alkenes, 283ff
  catalytic, 283ff
  destructive, 285
  hydrogen fluoride, 292
  isobutane, 283ff
Analysis, chromatographic, *see* Chromatography
Arene extraction plant, 248f
  extraction column, 249
  feed stock, 248
  flow diagram, 249f
  material balance, 250
  products, 249
  technological conditions, 250
Arenes, 34ff
  antiknock property, 89
  catalytic cracking, 217f, 223
  cetane number, 95
  determination of content, 66f
  extractants, 248
  hydrocracking, 256ff
  octane number, 89
  separation, 72, 248ff
  thermal transformations, 175f
Aromatics, 84, *see also* Arenes
  Gibbs enetgy, 166
Asphaltenes, 76f
Asphalts, 84, 366ff
  building, 367f
  characteristics, 369
  oxidation, 369ff
    in column apparatus, 371f
    techonology, 369ff
    in tubular reactor, 369, 370ff
  paving, 366f
  production, 403, 407
    methods, 367f
  requirements, 366
  service properties, 367
    and chemical composition, 367
Atmosphere, protection, 412f
Autoalkylation, 285

Bases, definition, 209
Benzene, 34ff, 84
  alkylation, 35
  Gibbs energy, 166f
  production from toluenes, 2[illegible]
  sulphonation, 35
Boundary, lubrication, 97
Butane(s), 27, 274
  Gibbs energy, 166
  heat of combustion, 59

Carbenes, 46
Carboides, 46, 176
Carbon,
  residue, 188
  technical, 84
Catalysis, 208ff
  heterogeneous, 208, 209f
  homogeneous, 208, 209

Catalyst(s),
activity, 210, 211
index, 211, 214
stability, 214
ageing, 211
alkene oligomerization, 293
carriers, 210
catalytic reforming, 235f
fatigue, 211
hydrocracking, 257f
hydrofining, 254, 355
isomerization, 296
light alkane isomerization, 296f
metallic, 211
promotors, 211
chemical, 211
structural, 211
regeneration, 212, 213, 243f, 254
steam and air method, 262
selectivity, 210
silica-alumina, 212, 214, *see also* Zeolites
Catalytic cracking, 212ff
arenes, 223
catalyst-to-charge ratio, 221
degree of conversion and space velocity, 220
feed stock, 218f
gas oil, 222f
gasoline, 222
heat effect, 221f
hydrocarbon gases, 222
material balance, 222
process parameters, 219ff
products, 218, 22f
yield, and temperature, 220
space velocity in, 220
technological conditions, 222
Catalytic cracking plant(s),
with bead catalyst, 223ff
equipment, 225f
flow diagram, 233ff
process control, 226f
reactor, 225f
reconstruction, 227
regenerator, 226
with lift reactor, 232f
with powdered catalyst, 228ff
equipment, 229
flow diagram, 228f
process control, 230f
reactor, 229
reconstruction, 232
safety engineering, 231
technical and economical indices, 231f
types, 223
Catalytic reforming plant,
catalyst regeneration, 243f
compressors, 248
coolers, 247
emergency blockings, 245
equipment, 245ff
with fixed-bed catalysts, 241f
flow diagram, 241f, 243, 244
furnace, 247
gasoline yield, 237f
heat effect, 237
heat exchangers, 247
hydrogen-containing gas, 240f
hydrogen yield, 237, 238
material balance, 240
with moving catalyst bed, 243f
process control, 244f
process parameters, 237f
products, 236
ratio, feed, hydrogen-containing gas, 239
reactor, 243, 245ff
space velocity, 239
stock, 236
technological conditions, 239f
Cellosolve, 93
Centres, active, 210
Ceresine(s), 29f, 83
production, 358, 407
uses, 30
Cetane, 95
Chemosorption, 210
Chemmotology, 104
Chimneys,
height, 413f
and sulphur oxide discharges, 413f
Chromatography, 61ff
adsorption, 61
displacement, 62
elution, 62
fluorescent, 71
liquid adsorption, 61f, 72ff
Coke,
ash content, 189f
calcination, 190
formation in thermal cracking, 178
granulometric composition, 189f
hydraulic cutter, 197f
petroleum, 84, 188
quality indices, 89f
sulphur content, 189f
Coking, 163
batch, 186
delayed, 186
coke yield, 189f
flow diagram, 192ff
feed stock, 163, 187f
in fluidized bed, 186f, 198f
plant types, 186
product composition, 188
in stills, 186
Column,
contact, rotary disk, 324, 325
extraction, 249, 320
rectification, *see* Rectification column
topping, regu ation, 152ff
Compounds,
nitrogen-containing, 43ff
oxygen-containing, 38f
sulphur-containing, 39ff
polycyclic, 43
removal from gases, 275
thermal transformations, 176
Constant,
equilibrium, reactions, 165, 167
and temperature, 166
gas, 165
Contact, Petrov's, 377
Coolers,
air, 147f
characteristics, 149
fin factor, 147
reforming reactor, 247
Corrosion,
causes, 149f
combatting, 150
inhibitors, 150
Cracking,
catalytic, *see* Catalytic cracking
thermal, 162f, 179ff
Crystallization, 63
fractional, 63
Crystallizer, ammonia, 341
Crystallohydrate, formation, 277
Cycloalkanes, 30ff
aniline point, 68
antiknock property, 89
catalytic cracking, 216f
atalytic dehydrogenation, 69

Cycloalkanes, 30ff
cetane number, 95
dealkylation, 174
decomposition, thermal, 175
decyclization, 175
dehydrogenation, 174, 234
determination of content, 67ff
hydrocracking, 255f
octane number, 89
physical constants, 68
thermal transformations, 174f
Cyclohexane, thermal decomposition, 175
Cyclopentanes,
hydrogenolysis, 256
physical constants, 68

Defoamants, 102
Dehydrator, electrical, 117ff
Delayed coking plant, 192ff
coke processing and transportation systems, 195f
equipment, 197f
flow diagram, 192ff
material balance, 196f
operation faults, 198
optimal schedules, 196
reaction chambers, 194f, 197
coke discharge, 194f
operation, 194f
technological conditions, 196
Degree, conversion, 168f
Demulsifiers, 112f, 116
Density, 48
Deoiling,
gatch, 358ff
petrolatum, 359
wax, 359
Deposits, gas-condensate, formation, 26f
Detonation, 86f, *see also* Knock
Dewaxing, 299, 336
diesel fuel, carbamide, 299f
flow diagram, 301f
material balance, 303
safety rules, 303
technological parameters, 302f
process parameters, 337
product quality, 337
solvent raffinates, 335ff
temperature effect, 336
temperature gradient, 336
Dewaxing plant, 338ff
equipment, 341
flow diagram, 338ff
material balance, 340
process control, 341f
safety precautions, 342
technological conditions, 340
Dienes, separation, 66
Difference, refractometric, 55
Dispersion, specific, 55
Disproportionation, hydrogen, 215f
Distillate(s),
hydrocracking, 263f
hydrofining, 258ff
indices, 133
light,
analysis, 64ff
treatment, *see* Light distillate treatment
Distillation, 60f, 120f
molecular, 61
primary, products, 124f
secondary, 159ff
simple, 60
vacuum, 121
Drilling, percussion, 16f

Effluents, refinery, 394f
environment protection from, 411ff
fecal, 394
production, 394
storm water, 394
treatment, 395
Ejectors, steam-jet, 139f
Emulsifiers, 111
Emulsions, formation conditions, 110f
Energy,
activation, free radical reaction, 172
bond, 169
Gibbs, *see* Gibbs energy
Engine,
four-stroke, working cycle, 85, 94
jet, 91
Enthalpy, 58
Ethane, 27, 274
Gibbs energy, 166
heat of combustion, 59
thermal transformations, 170f
Ether, methyl-tert butyl, 88
Ethylbenzene, 36, 84
Ethylene,
decomposition, 173
production, 200
Exchangers, heat, *see* Heat exchangers
Extraction, 63

Factor,
characterization, 56, 58
extraction, 133
loading, cracking furnace, 181
recycle, cracking furnace, 181
viscosity, 97
Farms, tank, 381
Feed stock,
carbon residue, 188
laboratory control, 154
pyrolysis, 199f
thermal cracking, 179
Filter, disk, 345f
Fluid, ethyl, 88
Formula,
Voinov's, 49
Walter's, 50
Fraction(s), 22f, *see also* individual fractions
diesel, 125
gas oil, composition, 25
gasoline, 125
composition, 25
group chemical analysis, 70f
high-boiling, analysis, 71ff
type, 74ff
kerosene, 125
composition, 25
group chemical analysis, 70f
lubricating oil, 161f
overlap, 133f
petroleum,
boiling point lowering, 139ff
heat capacity and temperature, 57f
secondary distillation, 159ff
specific gravity, 48
thermal properties, 56ff
potential, 133
separation, 22
Fractionator, gasoline, secondary, 159ff
flow diagram, 160f
material balance, 161
technological conditions, 161
Fuel(s),
antiknock properties, 86f

Fuel(s),
diesel, 79, 94ff
heat of combustion, 59
ignition properties, 94
pour point, 95
production, 402, 403
service properties, 194
distillation range, 89f
gas-turbine, 79
jet, *see* Jet fuel
knock resistance, 86f
liquid, 79f
heat of combustion, 59
quality assessment methods, 104
sensitivity, 87
stove, 80
Fuel oil, 23, 80, 125
heat of combustion, 59
use at refineries, 386f
vacuum distillation, 125, 127
Furfural,
oil treatment, 322ff
as solvent, 321f
Furnaces,
catalytic reforming, 247
cracking, 181
pipe, *see* Pipe furnaces
pyrolysis, 205ff

Gas(es),
casing-head, 27
composition, 27
processing, 108f
dew point, 277
drying, 108
absorbents, 277
fields, 14
flue, heat utilization, 387f
fuel, use at refineries, 387
gas-condensate field, composition, 26
heat of combustion, 59
hydrogen-containing, 260
liquefied, 124
household fuel, 80
production, 403
migration, 10
mixture separation, 277ff
absorption, 278f
adsorption, 279
compression, 278
condensation, 278
rectification, 279
natural,
carburettor fuel, 91
composition, 14, 26
drying, 108
extraction, 15
processing, 108
production, 15
uses, 15, 27
petroleum,
characteristics, 272ff
drying, 277
purification methods, 275
treatment, 274ff
uses, 274
processing, danger sources, 157f
rich, 27
separation, absorbents, 278
solubility in petroleum products, 55f
thermal cracking, 179
Gas oil,
catalytic cracking, 222f
coking plant, 188
heavy, production, 403
hydrocracking,
single-stage, 264ff
two-stage, 266ff
light, production, 403
thermally cracked, 180
Gasolines,
anticorrosive properties, 91
aviation, 79
heat of combustion, 59
knock rating, 87
octane number, 87
catalytic cracking, 222
chemical stability, 90
coking plant, 188
ethyl, 88
fractionation, 159f
gas, 27
hydrostabilized, 202
middle boiling point, 90
motor, 79
heat of combustion, 59
octane number, 87, 237
production, 402, 403
secondary, hydrofining, 263
service indices, 85f
thermal cracking, 179f
vapour pressure, 90
yield,
in catalytic reforming, 237f
in thermal cracking, 178f
Gatch, 335, 337, 358
deoiling, 358ff
processing, 407
Gibbs energy, 165ff
and pressure, 168
and temperature, 166ff
Gradient, extraction temperature, 322
Greases, 83, 360ff
cooking cauldron, 363
deaeration, 364
homogenization, 364
production technology, 363f
batch process, 363f
continuous process, 364
properties, 361f
raw materials, 364
service properties, 362f
stabilizers, 362
thickeners, 361f

Half-tar, 23
Heat,
combustion, 59, 92
gases, 59
liquid fuel, 59
vaporization, 58f
Heat exchangers, 146f
characteristics, 149
double-tube, 146
with floating head, 146f
shell-and-tube, 146
Heptane,
Gibbs energy, 166f
octane number, 87
Hydrocarbons, 55f
antiknock properties, 86f
dissolving ability, 55f
explosive limits, 52
with hybrid structure, 36ff
knock resistance, 86f
solubility, 56
thermal stability, 169
thermal transformations, 170ff
unsaturated,
content determination, 66, 70f

Hydrocracking, 254ff
alkanes, 254
arenes, 256f
catalysts, 257f
equipment, 265f, 269
flow diagram, 267ff
gas oils,
single-stage, 264ff
two-stage, 266ff
material balance, 264, 269
product yield and space velocity, 266
reactor, 265
tars, 271f
techno ogical conditions, 264, 268f
unsaturated hydrocarbons, 254f
Hydrofining, 253
catalysts, 254
catalytic, 258
distillates, 258ff
hydrogen consumption, 259f
indirect, 270
jet fuels, 263
pressure, 258f
process parameters, 258f
secondary gasolines, 263
space velocity, 259
technological conditions, 262
temperature, 258
Hydrogen,
heat of combustion, 59
production, 272
redistribution in alkylation, 285
Hydrogenation, heat effect, 260

Ignition, hot-head, 89
Index,
catalyst activity, 211, 214
refractive, 55
viscosity (VI), 51f, 97
Inhibitors,
corrosion, 150
oxidation, 90f, 99
Isobutane, 274
Isobutane alkylation plants, 285ff
feed stock, 285f
flow diagram, 287f
material balance, 291
process parameters, 286f
reactors, 289ff
Isomerization,
butane, 295
hexane, 295, 296
light alkanes, 295ff
catalysts, 296
bifunctional, 296f
degree of conversion, 296
feed stock, 295
products, 295
reactions, 295f
pentane, 295, 296
Isooctane,
luminometric number, 92
octane number, 87
Isopentane, 274
Isoprenoids, 28
Isoquinoline, 44

Jet fuel, 79, 91ff
anti-icing additive, 93
antiwear properties, 93
distillation range, 93
heat of combustion, 92
hydrofining, 263
production, 402
quality indices, 92
smoke point, 92

Kerosenes,
aviation, 79, *see also* Jet fuel
composition, 25
group chemical analysis, 70f
production, 402, 403
Ketones, as dewaxing solvents, 336
Knock, 86f
rating, 87
resistance, fuels, 86f

Lag, ignition, 94
Law,
Gladstone-Dale, 55
Henry's, 278
Lorentz-Lorenz, 55
Light distillate treatment,
acid, 308f
adsorption, 309
alkaline, 307f
arenes, removal, 309, 310
catalytic, 310
petroleum acids, removal, 309
sulphur-containing compounds, removal, 307, 309
Lubricating oil(s), 80f, *see also* Oil(s)
additives, *see* Additives
chemical stability, 98f
depressants, 99f, 103
fluidity, 97f
function, 96
lubricity, 97
motor, 81
oiliness, 97
protective properties, 99
synthetic, 365
thickened, 364f
thickeners, 365f
viscosity, 96f

Mass, molecular, petroleum and products, 49
Mazut, 23, *see also* Fuel oil
Medium, dispersing, 110
Mercaptans, 41f
Methane,
Gibbs energy, 166
heat of combustion, 59
thermal transformations, 170
Method,
aniline points, 67ff
catalytic dehydrogenation, 69

Naphthalene, 36
Naphthenes, *see* Cycloalkanes
Nozzles, furnace, 143, 144
Number,
bromine, 66
cetane, 95
iodine, 66
luminometric, 92
isooctane, 92
tetraline, 92
octane, 87
determination,
motor method, 87

Number,
research method, 87
heptane, 87
isooctane, 87

Oil(s),
aviation, 82
axle, 81
blending, 312f
carburettor engine, 82
commercial, properties, 313
components, production, 310f
compressor, 81
deasphalting, 316ff
diesel engine, 82f
distillate, 310
production, 312
fuel, *see* Fuel oil
gas, *see* Gas oil
hydrocracking, 356
feed stock, 356
hydrofining, 352f
by-products, 353
catalysts, 355
reactor, 355
industrial, 80
instrument, 81
lubricating, *see* Lubricating oil
petroleum, 80f, 96ff
production, 310ff, 407
feed stock preparation, 310
technology, 310ff
quality assessment methods, 104
residue, 310
production, 312
special, 83
steam engine, 81
transmission, 81
treatment, *see* Oil treatment
turbine, 81
waste,
collecting, 357
regenerating, 357f
Oil treatment,
adsorption, 342ff
alkali, 351
dewaxing, 335ff
double solvents, 329ff
furfural, 322ff
percolation method, 346ff
phenol, 326ff
and cresol, 329f
and furfural, 321ff
solvents, 313ff
sulphuric-acid, 349ff
Oil treatment plant,
contact, 343ff
equipment, 345f
flow diagram, 343f
material balance, 345
technological conditions, 344
continuous adsorption, 346ff
flow diagram, 347f
material balance, 349
technological conditions, 348
continuous alkali, 351f
flow diagram, 351f
double solvents, 329ff
equipment, 334f
flow diagram, 331ff
material balance, 334
technological conditions, 334
furfural, 322ff
equipment, 325
flow diagram, 323ff
material balance, 325
raffinate quality, 323
technological conditions, 325
phenol, 326ff
equipment, 329
flow diagram, 326f
material balance,
extraction column, 328
plant, 328
process control, 329
raffinate quality, 326
safety precautions, 329
technological conditions, 328
Oligomerization, 292
Oxidizer, column type, 370
Ozokerite, 29

Pentane, 274
Pentene, decomposition, 173
Petrolatum, 358
deoiling, 359
processing, 407
Petroleum(s), *see also* Hydrocarbons
boiling point lowering, 139ff
classification, 77f
component separation, 59ff
by complexing with urea, 63f
composition, 9
chemical, 23ff
analysis, 59ff
high-molecular part, 25
crude, 105
analysis, 76f
dehydration, 109
economical efficiency, 119
at fields, 113f
demulsification, 110
at fields, 113
desalting, 109
economical efficiency, 119
electrical, 114f
discharging facilities, 379
dissolving ability, 55f
electrical properties, 54
emulsions, 110ff
destroying methods, 112f
properties, 112
stability, 112
exploration, 11
explored reserves, 12
fluorescence, 54f
fractional composition, 22f
gathering and transportation systems, 105ff
gravity-type, 105f
pressure-sealed, 106
two-line, 105
handling, 379
safety precautions, 385
heat of combustion, 9, 59
hydrocarbons in, 24f
industrial production, 12ff
intershop transportation, 384
main producer countries, 12
major fields, 12
migration, 10
primary, 10
mineral components, 45
mixing, 120
molecular mass, 49
optical properties, 54f
origin, 9f
organic theory, 10
physical properties, 48f

Petroleum(s),
pools, 11
processing,
danger sources, 157f
for fuel and oil production, 406, 407
for fuel production, 402ff
primary, 120ff
production at fields,
gas lift method, 13
natural flow method, 13
sucker-rod pump method, 14
products, *see* Petroleum products
properties, 9
refining technology, development, 18f
solubility, 56
stabilization, 107f
storage, 381f
sulphur content, 24
surface tension, 110
uses, 14, 15
Petroleum products, 14, *see also* individual products
classification, 78ff
commercial, preparation, 383f
circulation in blending tanks, 384
continuous compounding systems, 384
ecological properties, 104
fractionation, 22f
light-end, production, 402f
molecular mass, 49
production statistics, 19
quality control, laboratory, 154
service properties, 104
storage, 381f
thermal conductivity, 57f
thermal cracking, 179
Phase, dispersed, 110
Phenol,
oil treatment, 326ff
as solvent, 321f
Pipe furnaces, 141ff
basic elements, 143
designs, 142
efficiency, 143
hip type, 144f
net calorific power, 141
nozzles, 143, 144
regulation, 151f
saddle type, 144f
thermal cracking plant, 184
upfired, 145f
Pipelines, refinery, 384
Plant(s),
accident prevention, 158f
additive production, 374ff
flow diagram, 375
material balance, 375
reactor, 375f
safety precautions, 376
air-separating, 398
arene extraction, *see* Arene extraction plant
asphalt, 369ff
flow diagram, 369, 370f
material balance, 371
atmospheric-vacuum,
operating conditions, 131f
pipe-still, 129ff
catalytic cracking, *see* Catalytic cracking plant
catalytic reforming, *see* Catalytic reforming plant
coking,
delayed, *see* Delayed coking plant
with horizontal still, 191
combined, 408f
for arene production, 250ff
dewaxing, *see* Dewaxing plant
direct-feed system, 412
electrical desalting, 114ff
equipment, 117
safety precautions, 119
gas, 108f, 280ff
feed stock, 109
flow diagram, 280ff
gatch deoiling, 359f
hydrocracking, *see* Hydrocracking plant
hydrofining, *see also* Hydrofining
flow diagram, 260ff
material balance, 262
isobutane alkylation, *see* Isobutane alkylation plant
oil hydrofining, 354ff
equipment, 355f
flow diagram, 354f
material balance, 355
technological conditions, 355
oil treatment, *see* Oil treatment plant
Parex, 304ff
flow diagram, 304ff
material balance, 306
pentane hexane isomerization, 297ff
feed stock, 297
flow diagram, 297f
material balance, 299
products, 297
technological conditions, 298f
primary distillation, *see* Primary distillation plant
propane-propylene polymerization, 293f
feed stock, 293
flow diagram, 294
process parameters, 293f
products, 293
pyrolysis, *see* Pyrolysis plants
tar deasphalting, *see* Tar deasphalting plant
thermal cracking, *see* Thermal cracking plant
thermal desalting, sewage, 116
Plate,
bubble-cap, 134f
grid, 136
sieve, 136
with S-shaped elements, 135
valve ballast, 136
valve straight flow, 135f
Platforming, 236
Point,
aniline, 67, 68
alkanes, 68
cycloalkanes, 68
cloud, 53f
congelation, *see* Point, pour
flash, 52
freezing, 54
ignition, 52
initial boiling (IBP), 22
middle boiling, 90
pour, 53
diesel fuels, 95
self-ignition, 53
smoke, 92
10%, 90
50%, 90
90%, 90
Poisons, catalytic, 211
Polyethyleneglycols as arene extractants, 248
Polymerization, 292
Pontoon, floating roof, 383
Porphyrines, 44
Potential, fraction, 133

Primary distillation plant,
atmospheric-vacuum, 129ff
material balance, 132
operating conditions, 131f
product yield, 133
combined, 128f
equipment, 134ff
flow diagrams, 125ff
operating conditions, 131f
operation, 150ff
flow chart, 155
preparation for repairs, 157
recording, 155
starting, 155f
stopping, 156f
safety engineering, 157ff
types, 124
Process, *see also* Plant(s), Reaction(s)
catalytic,
diffusion-controlled, 210
kinetically controlled, 209
reforming, 234
Duo-Sol, 330
hydrogenation, 253ff
primary, *see* Primary distillation plant
secondary, petroleum treatment, 162ff
classification, 162
thermal, 162ff
thermal cracking,
feed stock composition, 177
pressure, 177f
temperature and duration, 177
Products, petroleum, *see* Petroleum products
Promotors, catalyst,
chemical, 211
structural, 211
Propane, 27, 274
Gibbs energy, 166
heat of combustion, 59
in oil treatment, 320f
pyrolysis, 201
thermal transformations, 170f
Pumps, vacuum, 139
Pyridine, 44
Pyrolysis, 164
products, 201f
resin, 201f

Quality, distillate, 133
Quinoline, 44

Racks,
discharging, 379
double-service, 380
loading, 379
gallery, 379
stand pipe, 379
Radicals, free, 171f
Raman scattering, 64f
Range, distillation, 89f, 93
Rating, knock, 87
Ratio,
extraction-potential, 133
feed-hydrogen-containing gas, 239
Raw materials, petrochemical, 407
Reaction(s),
catalytic,
acid-base, 208f
ionic, 208f
reforming, 234
chain, 171f, 173
free radical, activation energy, 172
hydrocarbons,
cracking, activation energy, 169
equilibrium constant, 165, 167
rate, 169
thermodynamic probability, 164ff
isomerization, 295f
thermal cracking,
degree of conversion, 178
heat, 178
Zelinsky's, 33
Reactor,
alkylation, 289ff
cascade, 289, 291
contactor, 289f
catalytic cracking, 225f, 229
catalytic reforming, 243, 245ff
hydrocracking, 265
with mixing device, 375f
oil hydrofining, 355
tubular,
asphalt oxidation, 371
pyrolysis, 205f
Rectification, 60f, 122
Rectification column, 122f, 134ff
atmospheric, 137
characteristics, 137
composite, 123f
control, 152
plates, 134ff
reflux creation, 137f
single, 123
topping, 136
vacuum, 137
Refinery(ies),
adsorbent stores, 401
Refinery(ies)
air supply, 395ff
catalyst stores, 401
condensate handling at, 388
effluents, *see* Effluents
electrical illumination, 390f
electrical power supply, 389f
consumers, 389
reliability categories, 389f
sources, 389
systems, 390
flare system, 398ff
flow diagrams, 402ff
fuel supply, 391
general layout, 409ff
heat piping, 388
heat supply, 385
heat carriers, parameters, 385f
heating water parameters, 386
steam parameters, 386
sources, 386f
inert gas supply, 397
systems, 397f
with petrochemical processing, 407f
pipelines, 384
reagent facilities, 401
secondary energy resources, 387f
sewerage, 394f
site choice, 402
storage facilities, 400f
water supply, 392f
circulating system, 392
fire-fighting system, 394
fresh water, 393
potable water, 393
water-cooling towers, 392f
Reflux,
circulating, non-evaporating, 138
cold, evaporating, 137f
combined schemes, 138
Refraction, specific, 55
Residues,
carbon, feed stock, 188

Residues,
cracking, 180
hydrocracking, 270f
Resins, 46f
neutral, 46f
pyrolysis, 201f
Rule, beta-bond, 173

Safety precautions, 119, 157ff, 231, 303, 320f, 329, 342, 372, 376, 385
Salve, naphthenate, 376f
Scattering, Raman, 64f
Settlers, mixer, 331, 334
Soaps, 376
complex, 362
as grease thickeners, 361f
Solvents,
dewaxing, 336
ketones, 336
oil treatment, 313
double, 329f
furfural, 321f
phenol, 321f
and cresol, 329f
and furfural, 321ff
physical properties, 314f
propane, 329f
regeneration, 316, 339f
requirements to, 315f
selectivity, 314f
Specific gravity, 48f
petroleum fractions, 48
Spectra, infrared absorption, 65
Spectroscopy,
mass, 65
NMR, 65f
Station, automatic blending, 384
Still,
batch, 17
coke, 191
pipe,
double-flash, 125ff
single-flash, 125ff
Substances, *see also* Compounds
asphaltenic, 45ff
resinous, 45ff
uses, 48
Sulphides,
aliphatic, 42
monocyclic, 42f
Sulphoacids, 377
production, 378
Sulphur, distribution by fractions, 40
Surface, heating, calorific intensity, 142f
Surfactants, 110
Sweater, wax, 359
Sweats, 359

Tanks, 381
breathing, 383
farms, 381
fixed-roof, 381f
breathing of, 382
major, 382
minor, 382
floating roof, 382f
horizontal, 383
underground, 383
Tar(s), 23, 125
acid, utilization, 378
characteristics, 369
hydrocracking, 271f
products, 271f
Tar deasphalting plant,
equipment, 320
extraction column, 320
flow diagram, 318f
material balance, 319f
process control, 320
safety precautions, 320f
technological conditions, 319
Temperature,
consolute, 56
critical solution, 56
Test, aniline, 67
Tetraethyl lead (TEL), 88
response to, 88
Tetralin, luminometric number, 92
Theory,
carbonium-ion, 214f
free radical, 171f
Thermal cracking plants, 179ff
coke deposit removal, 185
equipment, 184f
feed stocks, 179
flow diagram, 180, 181f
high-pressure evaporator, 185
low-pressure evaporator, 185
material balance, 184
operation control, 185
pipe furnaces, 184
products, 179
reaction chamber, 184
technological conditions, 183f
two-coil, 180f
Thickeners, lubricating oil, 365f
Thiophane, 42f
Thiophene, 43
Toluene, 36, 84
Gibbs energy, 166
Treatment,
light distillate, *see* Light distillate treatment
oil, *see* Oil treatment
Turbomixer, 345

Unit, individual measuring, 105ff

Vacuum-filter, drum, 341f
Vaporization,
batch, 121
flash, 121
multiple-effect, 121
Visbreaking, 163
Viscosity, 49ff
conditional, 50
dynamic, 50
factor, 97
index (VI), 51f, 97
kinematic, 49f
lubricating oils, 49f, 96
and temperature, 50f, 96f

Water basins, protection, 414
Waxes, paraffin, 29f, 83
crude, additional treatment, 360
crystallization from oil residues, 335f
deoiling,
with selective solvents, 359
by sweating, 359
liquid, 83
production, 407
solid, 84
production, 358f
uses, 30
Wells, drilling, 12f

Xylenes, 36
production from toluenes, 251

Zeolites, 212f, 303
synthetic, 213